MORRIS Industries Ltd.

Parts Manual

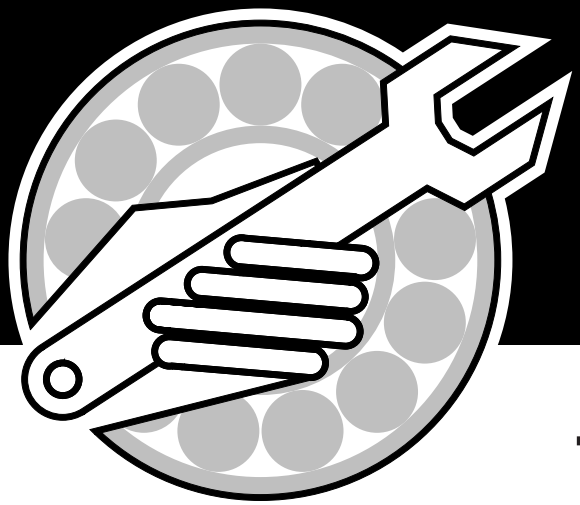

7000 Series Air Cart

Part Number N27799-06

IMPORTANT:

ALL ITEMS ARE IDENTIFIED WITH A PART NUMBER. Some of the smaller parts such as bolts, nuts, washers, etc. are not all shown, however, the quantity used are listed in the text for that section which they fit into. That particular quantity is always the quantity required for one complete assembly.

Smaller parts, which are welded together to construct a larger part, are not to be ordered as individual pieces, unless they have a part number to identify them.

Contact your nearest dealer for genuine repair parts. Dealers carry ample stock and are backed by the manufacturer and regional associations.

MORRIS PAINT

Spray Cans:

Part Number	Description
W-4647	Red MORRIS Spray Can
W-4648	Blue MORRIS Spray Can
N31087	Sky White MORRIS Spray Can

Litre Cans:

Part Number	Description
Z-10	Red MORRIS Paint/Litre
Z-11	Blue MORRIS Paint/Litre
N28345	Red Urethane Kit - 3.78 Litre
N30405	Blue Urethane Kit - 3.78 Litre
N30406	Primer Urethane Kit - 3.78 Litre
N30476	Expoxy Kit - .946 Litre

Table of Contents

Section 1:

Hopper and Frame 1-1

7130 / 7180 Hopper Assembly 1-2
7240 / 7300 Hopper Assembly - Prior to June 2007 1-4
7240 Hopper Assembly - June 2007 1-6
7252 Hopper Assembly 1-8
7130 / 7180 Tow Behind Frame 1-10
7130 / 7180 - 2 Meter Track 1-12
7130 / 7180 - 3 Meter Track 1-14
7240 / 7300 Tow Behind Frame 1-16
7252 Tow Behind Frame 1-18
7180 Tow Between Frame 1-20
7240 / 7300 Tow Between Frame 1-22
7252 Tow Between Frame 1-24
7240 / 7252 / 7300 Castor Fork 1-26

Section 2:

Metering 2-1

Metering Drive - 7130 / 7180 / 7240 / 7300 2-2
Metering Drive - 7252 2-6
Metering Body 2-10
Coated Metering Body 2-11
Optional Fertilizer Banding Kit - Rear 2-12
Optional Fertilizer Banding Kit - Front 2-13
Optional Remote Clutch Switch - Brylite Ends 2-14
Optional Remote Clutch Switch - Weather Pak Ends 2-16
Remote Clutch Switch - Xpress 2-18
Remote Clutch Switch - Maxim III 2-19
Optional Clutch 2-20

Section 3:

Wheel & Hub 3-1

7130 / 7180 Rear Wheels 3-2
7130 / 7180 Front Castor Fork 3-3
7240 / 7252 / 7300 Front Castor Fork 3-3
7180 TPH / 7240 / 7252 / 7300 Rear Wheels 3-4

Section 4:

Distribution 4-1

Single Shoot Tow Behind 4-2
Single Shoot Tow Behind 7252 4-4
Single Shoot Tow Between 4-6
Single Shoot Tow Between 7252 4-8
Single Shoot Tow Between Xpress 4-10
Dual Shoot Tow Behind 4-12
Dual Shoot Tow Behind 7252 4-15
Dual Shoot Tow Between 4-18
Dual Shoot Tow Between 7252 4-21
Broadcast 7252 Front Tank Tow Between - 4 & 5 Primaries 4-24
Broadcast 7252 Front Tank Tow Between - 6 & 8 Primaries 4-27
Broadcast 7252 Front Tank Tow Behind - 4 & 5 Primaries 4-30
Broadcast 7252 Front Tank Tow Behind - 6 & 8 Primaries 4-33
Broadcast 7252 Rear Tank Tow Between - 4 & 5 Primaries 4-36
Broadcast 7252 Rear Tank Tow Between - 6 & 8 Primaries 4-39
Broadcast 7252 RearTank Tow Behind - 4 & 5 Primaries 4-42
Broadcast 7252 Rear Tank Tow Behind - 6 & 8 Primaries 4-45

Table of Contents

Broadcast 7252 Deflector Mounts 4-48
Divider Head 4-50
Double Shoot Diverter Valve 4-52
Double Shoot Plenum 4-53
Plenum 7252 Broadcast 4-54

Section 5:
Fan & Auger Drives 5-1
Engine Drive Fan 5-2
Engine Drive Auger Hydraulics 5-6
Tow Behind Hydraulic Drive w/o Auger 5-8
Tow Behind Hydraulic Drive w/Auger 5-10
Tow Between Hydraulic Drive w/o Auger 5-12
Tow Between Hydraulic Drive w/Auger 5-14
Tow Between Hydraulic Drive w/Front Latch Auger 5-16
Xpress Tow Between Hydraulic Drive (Prior to November 2004) 5-18
Xpress Tow Between Hydraulic Drive (From November 2004) 5-20
Tow Between Implement Hydraulics 5-22

Section 6:
Auger 6-1
7130 / 7180 - 7 Auger 6-2
7180 - Front Latch Auger 6-4
7240 / 7300 - 7 & 8 Auger 6-6
7240 - 7 Front Latch Auger 6-10
7240 - 8 Front Latch Auger 6-12
7252 - 7 Auger 6-14

Section 7:
Fan 7-1
Crary Belt Drive 7-2
Crary Hydraulic Drive 7-3

Section 8:
Monitor 8-1
Version 1 Monitor & Pin Blockage Module 8-2
Version 2 Monitor & Pin Blockage Module 8-4
Version 3 Monitor & Pin Blockage Module 8-6
Replacement Connectors 8-8
Optical Blockage System 8-9
FTU - Field Test Unit 8-10

Section 9:
Variable Rate System 9-1
Tow Behind Hydraulics w/o Auger 9-2
Tow Behind Hydraulics w/Auger 9-4
Tow Between Hydraulics w/o Auger 9-6
Tow Between Hydraulics w/Auger 9-8
Xpress Tow Between Hydraulics w/Auger 9-10
Metering Drive 7180 / 7240 / 7300 9-12
Metering Drive 7252 9-14
Control System 9-16
Valve Manifold 9-18

Table of Contents

Section 10:
Options 10-1
Rear Tow Hitch 10-2
Rear Tow Hitch - Long 10-3
Hyd Extension Kit for Rear Tow Hitch 10-4
Hitch Extension Kit for Tow Between Cart 10-5
Three Point Hitch 10-6
Three Point Hitch Air Cart Hydraulics w/Std Auger 10-8
Three Point Hitch Hydraulics for Xpress (Prior to November 2004) 10-10
Three Point Hitch Distribution 10-12
Three Point Hitch Lift Cylinder 10-14

Section 11:
Lighting 11-1
7000 Series Air Cart 11-2

Index ..... Index-i

Table of Contents

Notes

Section 1:
Hopper and Frame

Section Contents

7130 / 7180 Hopper Assembly 1-2
7240 / 7300 Hopper Assembly - Prior to June 2007 1-4
7240 Hopper Assembly - June 2007 1-6
7252 Hopper Assembly 1-8
7130 / 7180 Tow Behind Frame 1-10
7130 / 7180 - 2 Meter Track 1-12
7130 / 7180 - 3 Meter Track 1-14
7240 / 7300 Tow Behind Frame 1-16
7252 Tow Behind Frame 1-18
7180 Tow Between Frame 1-20
7240 / 7300 Tow Between Frame 1-22
7252 Tow Between Frame 1-24
7240 / 7252 / 7300 Castor Fork 1-26

Hopper and Frame
7130 / 7180 Hopper Assembly

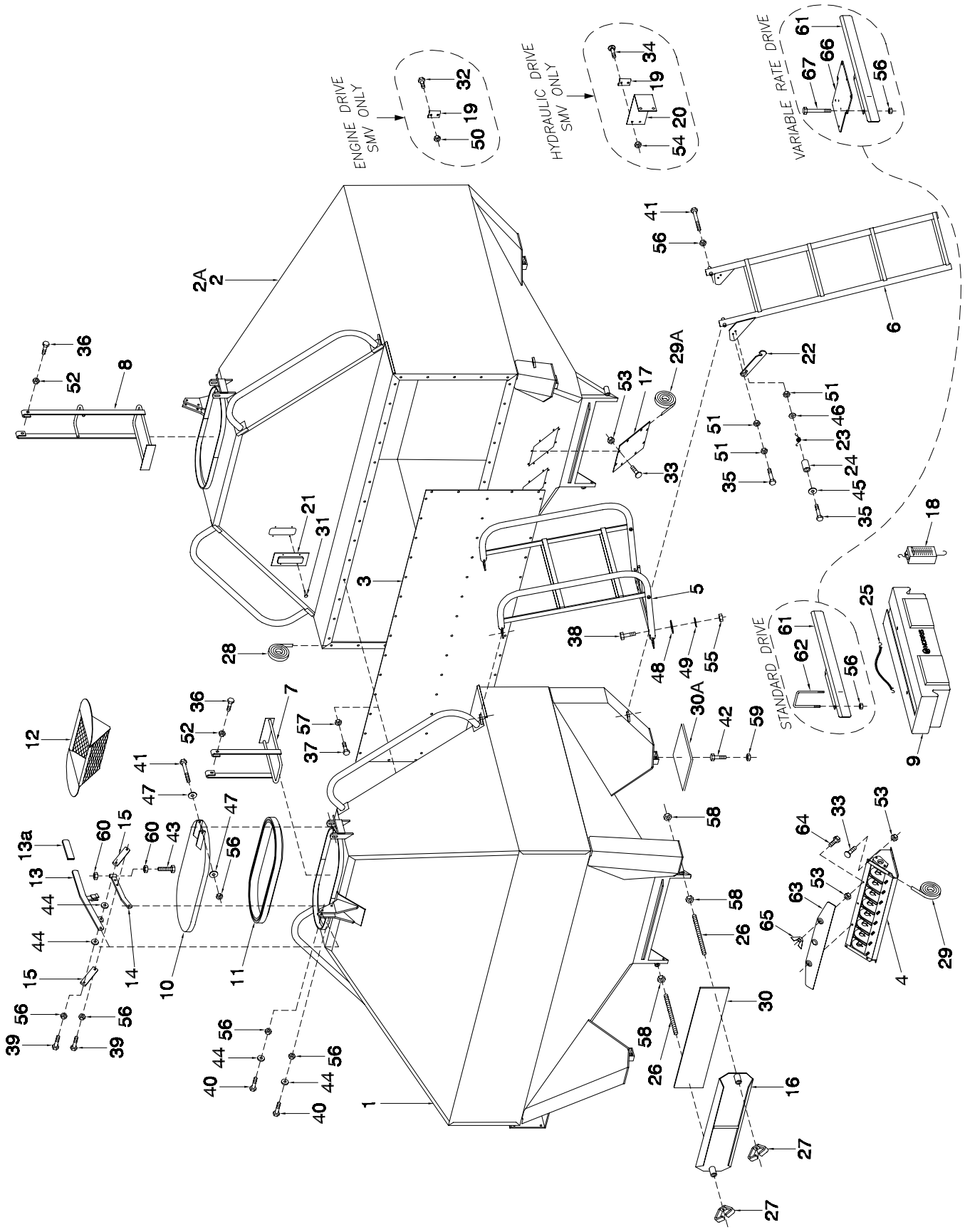

Hopper and Frame - 7130 / 7180 Hopper Assembly

Item	Part No.	Description	Qty
1	N27191	Hopper - Front 7180	1
	N27141	Hopper - Front 7130	1
2	N27192	Hopper - Rear (Hydraulic Drive) 7180	1
	N27142	Hopper - Rear (Hydraulic Drive) 7130	1
2A	N27193	Hopper - Rear (Engine Drive) 7180	1
	N27143	Hopper - Rear (Engine Drive) 7130	1
3	N27337	Tank Panel 7180	1
	N27336	Tank Panel 7130	1
4	* * * * *	Metering Body - 8 Outlet (See Section 2 page 10 & 11)	2
5	N27475	Handrail - Tank 7180	1
	N27470	Handrail - Tank 7130	1
6	N24792	Ladder 4 Step	1
7	N27375	Ladder - Inner - Front Tank 7180 ONLY	1
8	N27380	Ladder - Inner - Rear Tank 7180	1
	N27375	Ladder - Inner - Rear Tank 7130	1
9	N27005	Sample Collector	1
10	N27715	Lid	2
11	N19496	Lid Seal	2
12	N19726	Screen (Optional)	2
13	N32770	Handle - Tank Lid	2
13A	N32769	Vinyl Grip	2
14	N19108	Link	2
15	N19109	Link	4
16	N27080	Door - Cleanout	2
17	N27455	Plate - Cover - Dual Outlet	4
18	N42220	Digital Scale	1
	N29280	Spring Scale (0 to 50 lb Capacity)	
19	W-1558	Slow Moving Sign Socket	1
20	N21475	Slow Moving Sign Bracket (Hydraulic Drive ONLY)	1
21	N19791	Sight Glass	2
22	N19211	Ladder Lock Arm	1
23	D-5098	Spring	1
24	N19366	Bushing - 1/2 OD x 0.334 ID x 5/8 Lg	1
25	N19563	Rubber Tie Strap - 10	2
26	N27155	Redi-Rod - 1/2 x 7 1/2 Lg	4
27	N27360	Wing Locknut - 1/2	4
28	N13900	Seal Strip - 3/16 x 1 3/4 (Bulk/ft) 7180	35.5 ft
	N13900	Seal Strip - 3/16 x 1 3/4 (Bulk/ft) 7130	31.5 ft
29	N15716	Seal Strip - 1/4 x 1 x 152 Lg (Bulk/ft)	2
29A	N15716	Seal Strip - 1/4 x 1 x 38 Lg (Bulk/ft)	4
30	N19437	Seal Strip - 3/8 x 7 x 26 1/2 Lg (Bulk/ft)	2
30A	N19437	Seal Strip - 3/8 x 7 x 8 Lg (Bulk/ft)	8
31	N21450	Pop Rivet - 1/8 x 1/2 Lg - Closed Head	8
32	K-3830	Hex Bolt - 1/4 x 1/2 Lg (Engine Drive ONLY)	1
33	D-5259	Carriage Bolt - 5/16 x 3/4 Lg	44
34	D-5259	Carriage Bolt - 5/16 x 3/4 Lg (Hyd Drive ONLY)	2
35	W-472	Hex Bolt - 5/16 x 1 1/4 Lg	2
36	W-473	Hex Bolt - 5/16 x 1 1/2 Lg 7180	4
	W-473	Hex Bolt - 5/16 x 1 1/2 Lg 7130	2
37	W-475	Hex Bolt - 3/8 x 1 Lg 7180	52
	W-475	Hex Bolt - 3/8 x 1 Lg 7130	48
38	W-187	Hex Bolt - 3/8 x 1 1/4 Lg	4
39	W-619	Hex Bolt - 3/8 x 1 3/4 Lg	4
40	W-479	Hex Bolt - 3/8 x 2 1/4 Lg	4
41	C-3918	Hex Bolt - 3/8 x 5 Lg	4
42	W-490	Hex Bolt - 1/2 x 2 1/2 Lg	8
43	N19127	Lid Bolt - 1/2 x 2 3/4 Lg	2
44	N21266	Washer - Wear - 1/4 x 1 1/2 Dia	8
45	D-5488	Flatwasher - 5/16 x 11/16 OD	1
46	W-522	Lockwasher - 5/16	1
47	D-5489	Flatwasher - 3/8 x 13/16 OD	4
48	D-5579	Flatwasher - 3/8 x 1 OD	4
49	W-523	Lockwasher - 3/8	4
50	D-5277	Locknut - 1/4 Serrated (Engine Drive ONLY)	1
51	W-513	Hex Nut - 5/16	3
52	D-5272	Locknut - 5/16 Unitorque 7180	4
	D-5272	Locknut - 5/16 Unitorque 7130	2
53	D-5278	Locknut - 5/16 Serrated	46
54	D-5278	Locknut - 5/16 Serrated (Hydraulic Drive ONLY)	2
55	W-514	Hex Nut - 3/8	4
56	M-3388	Locknut - 3/8 Unitorque	16
57	D-5279	Locknut - 3/8 Serrated 7180	52
	D-5279	Locknut - 3/8 Serrated 7130	48
58	W-516	Hex Nut - 1/2	8
59	F-3405	Locknut - 1/2 Unitorque	8
60	S-1292	Jam Nut - 1/2	4
61	N27856	Bracket - Sampler	1
62	N19723	U-Bolt - 3/8 x 4 1/16 x 6 15/16	2
63	N28831	Cover Plate - Meter Body (For Fine Seeds)	1
64	N29048	Hex Bolt - 5/16 x 1 Lg Stainless Steel	2
65	N29049	Wingnut - 5/16 Stainless Steel	2
66	N29335	Bracket - Manifold Valve (Variable Rate Drive ONLY)	1
67	N19678	Hex Bolt - 3/8 x 7 Lg (Variable Rate Drive ONLY)	4
	N27591	Decal - "MORRIS" (Not Shown) 7180	2
	N27590	Decal - "MORRIS" (Not Shown) 7130	2
	N27594	Decal - "7180" (Not Shown)	1
	N27593	Decal - "7130" (Not Shown)	1
	N34476	Reflector - Red (Not Shown)	2
	N34477	Reflector - Yellow (Not Shown)	4
	N34478	Reflector - Orange (Not Shown)	2
	D-5721	Decal - "FERTILIZER" (Not Shown)	1
	N15094	Decal - Caution (Not Shown)	2
	N21604	Decal - Important "CORROSION" (Not Shown)	2
	N27851	Rate Chart Decal - Slow Speed (Not Shown)	1
	N27861	Rate Chart Decal - Slow Speed - Metric (Not Shown)	1
	N27852	Rate Chart Decal - Seed (Not Shown)	1
	N27862	Rate Chart Decal - Seed - Metric (Not Shown)	1
	N27853	Rate Chart Decal - Fertilizer (Not Shown)	1
	N27863	Rate Chart Decal - Fertilizer - Metric (Not Shown)	1
	N28667	Rate Chart Decal - Soybeans (Not Shown)	1
	N34281	Rate Chart Decal - Sunflowers (Not Shown)	1
	N29063	Decal - "Cover Plate" (Not Shown)	1
	N29380	Decal - "Rate Calibration" For Variable Rate Only (Not Shown)	1
	N31706	Decal - "7180 VRT" For Variable Rate Only (Not Shown)	1

Hopper and Frame
7240 / 7300 Hopper Assembly - Prior to June 2007

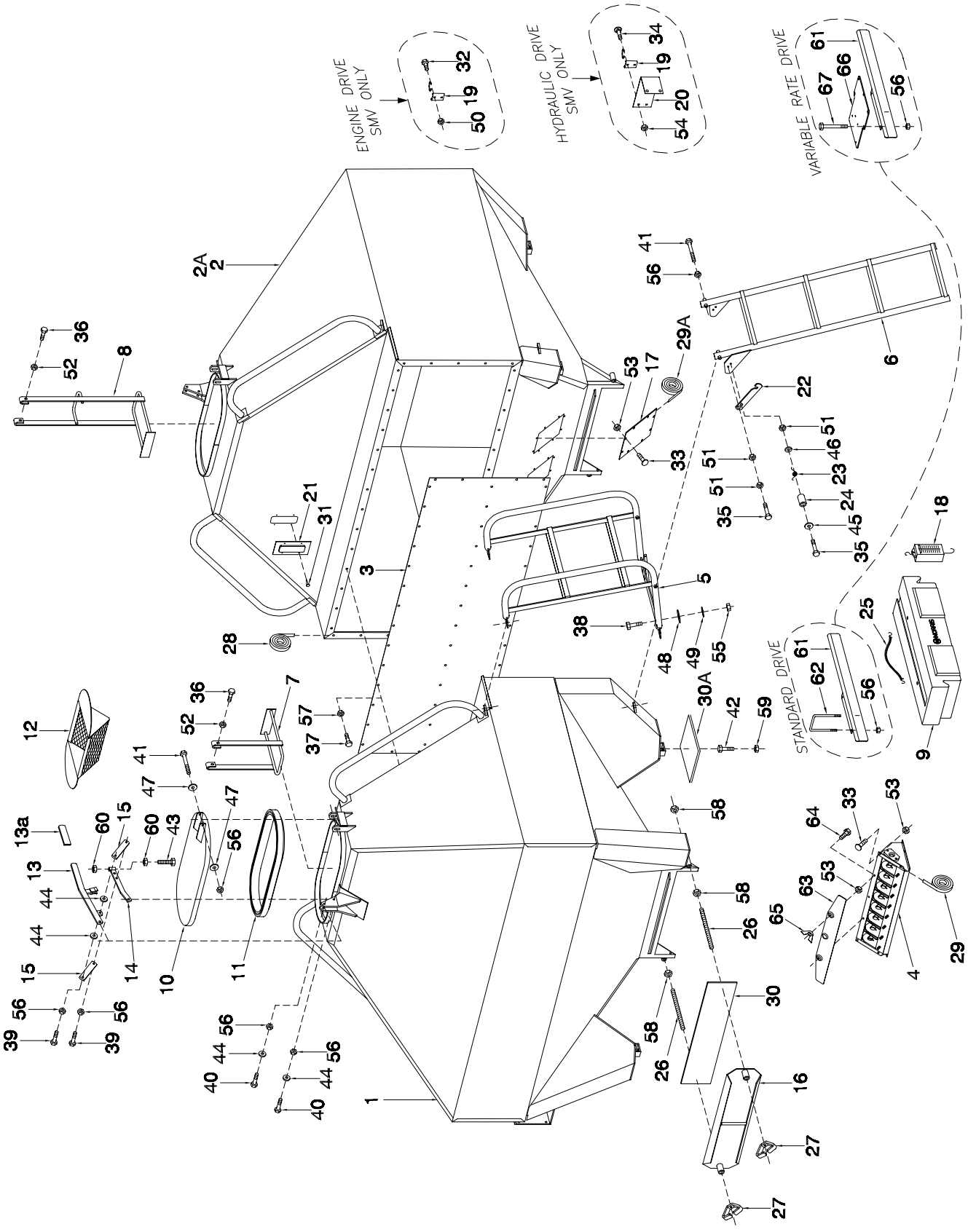

Hopper and Frame - 7240 / 7300 Hopper Assembly - Prior to June 2007

Item	Part No.	Description	Qty
1	N27251	Hopper - Front 7240	1
	N27311	Hopper - Front 7300	1
2	N27252	Hopper - Rear (Hydraulic Drive) 7240	1
	N27312	Hopper - Rear (Hydraulic Drive) 7300	1
2A	N27253	Hopper - Rear (Engine Drive) 7240	1
	N27313	Hopper - Rear (Engine Drive) 7300	1
3	N27338	Tank Panel 7240	1
	N27339	Tank Panel 7300	1
4	* * * * *	Metering Body - 8 Outlet (See Section 2 page 10 & 11)	2
5	N27480	Handrail - Tank 7240	1
	N27485	Handrail - Tank 7300	1
6	N24792	Ladder - 4 Step	1
7	N27385	Ladder - Inner - Front Tank	1
8	N27390	Ladder - Inner - Rear Tank	1
9	N27005	Sample Collector	1
10	N27715	Lid	2
11	N19496	Lid Seal	2
12	N19726	Screen (Optional)	2
13	N32770	Handle - Tank Lid	2
13A	N32769	Vinyl Grip	2
14	N19108	Link	2
15	N19109	Link	4
16	N27080	Door - Cleanout	2
17	N27455	Plate - Cover - Dual Outlet	4
18	N42220	Digital Scale	1
	N29280	Spring Scale (0 to 50 lb Capacity)	
19	W-1558	Slow Moving Sign Socket	1
20	N21475	Slow Moving Sign Bracket (Hydraulic Drive ONLY)	1
21	N19791	Sight Glass	2
22	N19211	Ladder Lock Arm	1
23	D-5098	Spring	1
24	N19366	Bushing - 1/2 OD x 0.334 ID x 5/8 Lg	1
25	N19563	Rubber Tie Strap - 10	2
26	N27155	Redi-Rod - 1/2 x 7 1/2 Lg	4
27	N27360	Wing Locknut - 1/2	4
28	N13900	Seal Strip - 3/16 x 1 3/4 (Bulk/ft) 7240	37 ft
	N13900	Seal Strip - 3/16 x 1 3/4 (Bulk/ft) 7300	41.13 ft
29	N15716	Seal Strip - 1/4 x 1 x 152 Lg (Bulk/ft)	2
29A	N15716	Seal Strip - 1/4 x 1 x 38 Lg (Bulk/ft)	4
30	N19437	Seal Strip - 3/8 x 7 x 26 1/2 Lg (Bulk/ft)	2
30A	N19437	Seal Strip - 3/8 x 7 x 8 Lg (Bulk/ft)	8
31	N21450	Pop Rivet - 1/8 x 1/2 Lg - Closed Head	8
32	K-3830	Hex Bolt - 1/4 x 1/2 Lg (Engine Drive ONLY)	1
33	D-5259	Carriage Bolt - 5/16 x 3/4 Lg	44
34	D-5259	Carriage Bolt - 5/16 x 3/4 Lg (Hyd Drive ONLY)	2
35	W-472	Hex Bolt - 5/16 x 1 1/4 Lg	2
36	W-473	Hex Bolt - 5/16 x 1 1/2 Lg	4
37	W-475	Hex Bolt - 3/8 x 1 Lg 7240	54
	W-475	Hex Bolt - 3/8 x 1 Lg 7300	72
38	W-187	Hex Bolt - 3/8 x 1 1/4 Lg	4
39	W-619	Hex Bolt - 3/8 x 1 3/4 Lg	4
40	W-479	Hex Bolt - 3/8 x 2 1/4 Lg	4
41	C-3918	Hex Bolt - 3/8 x 5 Lg	4
42	W-490	Hex Bolt - 1/2 x 2 1/2 Lg	8
43	N19127	Lid Bolt - 1/2 x 2 3/4 Lg	2
44	N21266	Washer - Wear - 1/4 x 1 1/2 Dia	8
45	D-5488	Flatwasher - 5/16 x 11/16 OD	1
46	W-522	Lockwasher - 5/16	1
47	D-5489	Flatwasher - 3/8 x 13/16 OD	4
48	D-5579	Flatwasher - 3/8 x 1 OD	4
49	W-523	Lockwasher - 3/8	4
50	D-5277	Locknut - 1/4 Serrated (Engine Drive ONLY)	1
51	W-513	Hex Nut - 5/16	3
52	D-5272	Locknut - 5/16 Unitorque	4
53	D-5278	Locknut - 5/16 Serrated	46
54	D-5278	Locknut - 5/16 Serrated (Hydraulic Drive ONLY)	2
55	W-514	Hex Nut - 3/8	4
56	M-3388	Locknut - 3/8 Unitorque	16
57	D-5279	Locknut - 3/8 Serrated 7240	54
	D-5279	Locknut - 3/8 Serrated 7300	72
58	W-516	Hex Nut - 1/2	8
59	F-3405	Locknut - 1/2 Unitorque	8
60	S-1292	Jam Nut - 1/2	4
61	N27856	Bracket - Sampler	1
62	N25457	U-Bolt - 3/8 x 4 1/16 x 8 15/16	2
63	N28831	Cover Plate - Meter Body (For Fine Seeds)	1
64	N29048	Hex Bolt - 5/16 x 1 Lg Stainless Steel	2
65	N29049	Wingnut - 5/16 Stainless Steel	2
66	N29335	Bracket - Manifold Valve (Variable Rate Drive ONLY)	1
67	N29479	Hex Bolt - 3/8 x 9 Lg (Variable Rate Drive ONLY)	4
	N27591	Decal - "MORRIS" 7240 - Front & Rear Only (Not Shown)	2
	N27592	Decal - "MORRIS" 7240 - Side & 7300 - Front, Side & Rear	2
	N27595	Decal - "7240" (Not Shown)	1
	N27596	Decal - "7300" (Not Shown)	1
	N34476	Reflector - Red (Not Shown)	2
	N34477	Reflector - Yellow (Not Shown)	4
	N34478	Reflector - Orange (Not Shown)	2
	N15094	Decal - Caution (Not Shown)	2
	N21604	Decal - Important "CORROSION" (Not Shown)	2
	N27851	Rate Chart Decal - Slow Speed (Not Shown)	1
	N27861	Rate Chart Decal - Slow Speed - Metric (Not Shown)	1
	N27852	Rate Chart Decal - Seed (Not Shown)	1
	N27862	Rate Chart Decal - Seed - Metric (Not Shown)	1
	N27853	Rate Chart Decal - Fertilizer (Not Shown)	1
	N27863	Rate Chart Decal - Fertilizer - Metric (Not Shown)	1
	N28667	Rate Chart Decal - Soybeans (Not Shown)	1
	N34281	Rate Chart Decal - Sunflowers (Not Shown)	1
	N29063	Decal - "Cover Plate" (Not Shown)	1
	N29380	Decal - "Rate Calibration" Variable Rate Only (Not Shown)	1
	N31707	Decal - "7240 VRT" Varaible Rate Only (Not Shown)	1
	N31708	Decal - "7300 VRT" Varaible Rate Only (Not Shown)	1

Hopper and Frame
7240 Hopper Assembly - June 2007

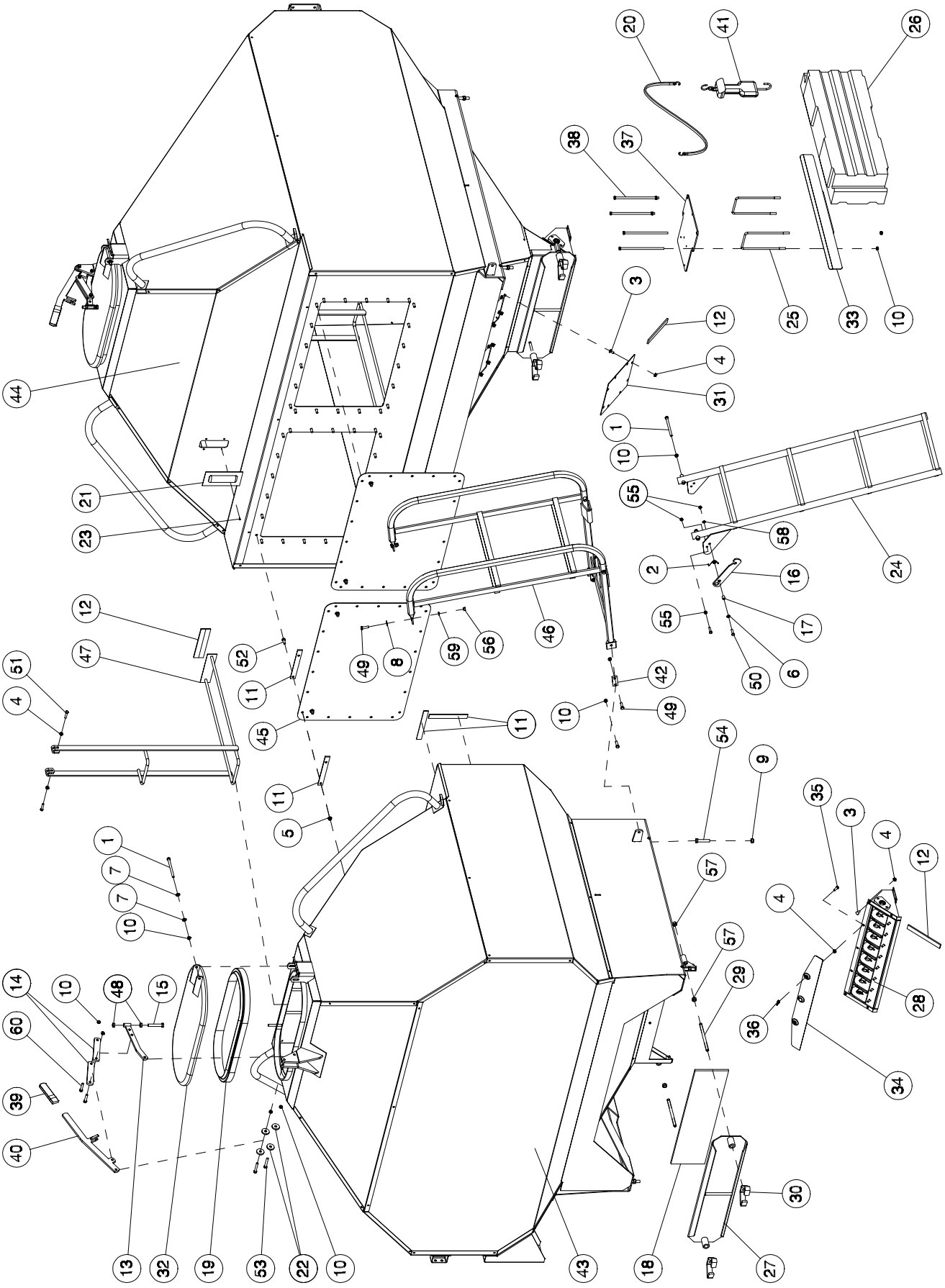

Hopper and Frame - 7240 Hopper Assembly - June 2007

Item	Part No.	Description	Qty
1	C-3918	Hex Bolt - 3/8 x 5 Lg	4
2	D-5098	Spring	1
3	D-5259	Carriage Bolt - 5/16 x 3/4 Lg	44
4	D-5278	Flange Lock Nut - 5/16	50
5	D-5279	Lock Nut - 3/8 Flange	48
6	D-5488	Washer - 11/32 ID x 11/16 OD x 1	1
7	D-5489	Washer - 13/32 ID x 13/16 OD x 1	4
8	D-5579	Washer - 13/32 ID x 1 OD x 16 Ga	2
9	F-3405	Locknut - 1/2 Unitorque	8
10	M-3388	Locknut - 3/8 Unitorque	20
11	N13900	Seal Strip - 3/16 x 1 3/4 (Bulk/ft)	37 ft
12	N15716	Seal Strip - 1/4 x 1 (Bulk/ft)	26 ft
13	N19108	Link	2
14	N19109	Link	4
15	N19127	Lid Bolt - 1/2 x 2 13/16 Lg	2
16	N19211	Ladder Lock Arm	1
17	N19366	Bushing - 1/2 OD x 0.334 ID	1
18	N19437	Seal Strip - 3/8 x 7 (Bulk/ft) x 4.875 ft	2
19	N19496	Tank Lid Seal	2
20	N19563	Tie Down Strap - Rubber - 10 Lg	2
21	N19791	Sight Glass	2
22	N21266	Wear Washer	8
23	N21450	Pop Rivet - Closed Head	8
24	N24792	Ladder	1
25	N25457	U-Bolt - 3/8 x 4 1/16 x 8 15/16	2
26	N27005	Sample Collector	1
27	N27080	Cleanout Door	2
28	N27100	Meterbody	2
29	N27155	Rod - Threaded - 1/2 Dia x 7 1/2 Lg	4
30	N27360	Wing - Lock Nut - 1/2	4
31	N27455	Blank Off Plate	4
32	N27715	Tank Lid	2
33	N27856	Sample Collector Bracket	1
34	N28831	Cover Plate - Meter Body	1
35	N29048	Hex Bolt - 5/16 x 1 Lg Stainless Steel	2
36	N29049	Wing Nut - 5/16 Stainless Steel	2
37	N29335	Mount Bracket - VRT only	1
38	N29479	Hex Bolt - 3/8 x 9 Lg - VRT only	4
39	N32769	Handle Cover	2
40	N32770	Tank Handle Weldment	2
41	N42220	Digital Hanging Scale	1
42	N42507	Link	2
43	N44050	Front Tank - 7240	1
44	N44060	Rear Tank - 7240	1
45	N44070	Tank Filler Panel	2
46	N44090	Handrail	1
47	N44100	Ladder - Inner	2
48	S-1292	Hex Jam Nut - 1/2	4
49	W-187	Hex Bolt - 3/8 x 1 1/4 Lg	6
50	W-472	Hex Bolt - 5/16 x 1 1/4 Lg	2
51	W-473	Hex Bolt - 5/16 x 1 1/2 Lg	4
52	W-475	Hex Bolt - 3/8 x 1 Lg	48
53	W-479	Hex Bolt - 3/8 x 2 1/4 Lg	4
54	W-490	Hex Bolt - 1/2 x 2 1/2 Lg	8
55	W-513	Hex Nut - 5/16	3
56	W-514	Hex Nut - 3/8	2
57	W-516	Hex Nut - 1/2	8
58	W-522	Lockwasher - 5/16	1
59	W-523	Lockwasher - 3/8	2
60	W-619	Hex Bolt - 3/8 x 1 3/4 Lg	4
	N27591	Decal - “MORRIS” 7240 - Front & Rear Only (Not Shown)	2
	N27592	Decal - “MORRIS” 7240 - Side & 7300 - Front, Side & Rear	2
	N27595	Decal - “7240” (Not Shown)	1
	N27596	Decal - “7300” (Not Shown)	1
	N34476	Reflector - Red (Not Shown)	2
	N34477	Reflector - Yellow (Not Shown)	4
	N34478	Reflector - Orange (Not Shown)	2
	N15094	Decal - Caution (Not Shown)	2
	N21604	Decal - Important “CORROSION” (Not Shown)	2
	N27851	Rate Chart Decal - Slow Speed (Not Shown)	1
	N27861	Rate Chart Decal - Slow Speed - Metric (Not Shown)	1
	N27852	Rate Chart Decal - Seed (Not Shown)	1
	N27862	Rate Chart Decal - Seed - Metric (Not Shown)	1
	N27853	Rate Chart Decal - Fertilizer (Not Shown)	1
	N27863	Rate Chart Decal - Fertilizer - Metric (Not Shown)	1
	N28667	Rate Chart Decal - Soybeans (Not Shown)	1
	N34281	Rate Chart Decal - Sunflowers (Not Shown)	1
	N29063	Decal - “Cover Plate” (Not Shown)	1
	N29380	Decal - “Rate Calibration” Variable Rate Only (Not Shown)	1
	N31707	Decal - “7240 VRT” Varaible Rate Only (Not Shown)	1
	N31708	Decal - “7300 VRT” Varaible Rate Only (Not Shown)	1

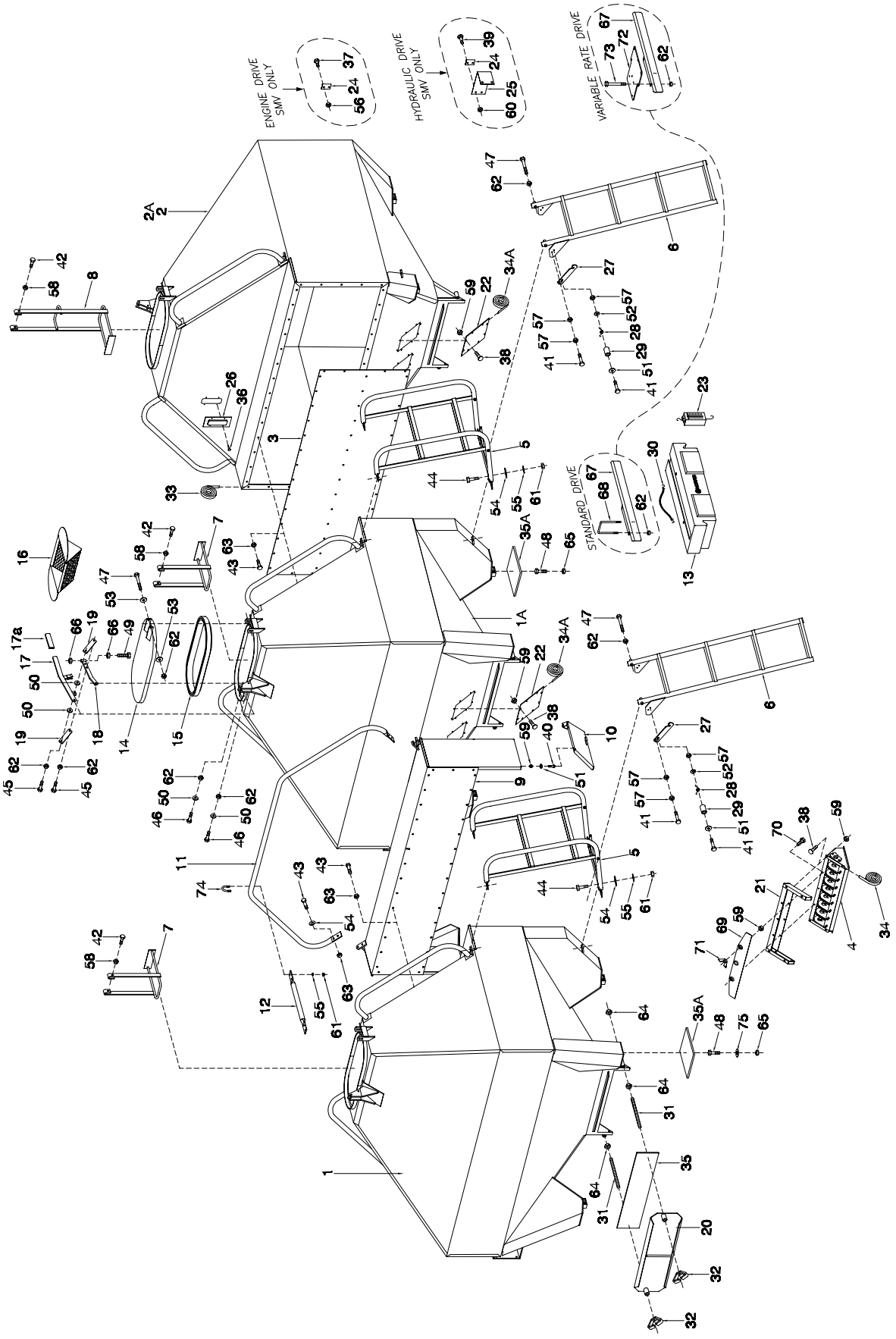
ENGINE DRIVE ONLY
SMV
HYDRAULIC DRIVE ONLY
SMV
VARIABLE RATE DRIVE
STANDARD DRIVE

Hopper and Frame - 7252 Hopper Assembly

Item	Part No.	Description	Qty
1	N27191	Hopper - Front	1
1A	N32052	Hopper - Middle	1
2	N27192	Hopper - Rear (Hydraulic Drive)	1
2A	N27193	Hopper - Rear (Engine Drive)	1
3	N27337	Tank Panel	1
4	* * * * *	Metering Body - 8 Outlet (See Section 2 page 10 & 11)	3
5	N27475	Handrail - Tank	2
6	N24792	Ladder 4 Step	2
7	N27375	Ladder - Inner - Front Tank	2
8	N27380	Ladder - Inner - Rear Tank	1
9	N31513	Platform	1
10	N31626	Platform Extension	1
11	N31548	Handrail	1
12	N31549	Cross Brace	1
13	N27005	Sample Collector	1
14	N27715	Lid	3
15	N19496	Lid Seal	3
16	N19726	Screen (Optional)	3
17	N32770	Handle - Tank Lid (N32769 - Vinyl Grip)	3
18	N19108	Link	3
19	N19109	Link	6
20	N31506	Cleanout Door	3
21	N31503	Meterbody Spacer	3
22	N27455	Plate - Cover - Dual Outlet	8
23	N29280	Scale (0 to 50 lb Capacity)	1
	N42220	Digital Scale (Optional)	
24	W-1558	Slow Moving Sign Socket	1
25	N21475	Slow Moving Sign Bracket (Hydraulic Drive ONLY)	1
26	N19791	Sight Glass	3
27	N19211	Ladder Lock Arm	2
28	D-5098	Spring	2
29	N19366	Bushing - 1/2 OD x 0.334 ID x 5/8 Lg	2
30	N19563	Rubber Tie Strap - 10	2
31	N27155	Redi-Rod - 1/2 x 7 1/2 Lg	6
32	N27360	Wing Locknut - 1/2	6
33	N13900	Seal Strip - 3/16 x 1 3/4 (Bulk/ft)	52.5 ft
34	N15716	Seal Strip - 1/4 x 1 x 152 Lg (Bulk/ft)	3
34A	N15716	Seal Strip - 1/4 x 1 x 52 1/2 Lg (Bulk/ft)	4
35	N31623	Seal Strip - 3/8 x 9 x 26 1/2	3
35A	N19437	Seal Strip - 3/8 x 7 x 8 Lg (Bulk/ft)	12
36	N21450	Pop Rivet - 1/8 x 1/2 Lg - Closed Head	15
37	K-3830	Hex Bolt - 1/4 x 1/2 Lg (Engine Drive ONLY)	1
38	D-5259	Carriage Bolt - 5/16 x 3/4 Lg	66
39	D-5259	Carriage Bolt - 5/16 x 3/4 Lg (Hyd Drive ONLY)	2
40	F-1767	Hex Bolt - 5/16 x 3/4	15
41	W-472	Hex Bolt - 5/16 x 1 1/4 Lg	5
42	W-473	Hex Bolt - 5/16 x 1 1/2 Lg	6
43	W-475	Hex Bolt - 3/8 x 1 Lg	98
44	W-187	Hex Bolt - 3/8 x 1 1/4 Lg	10
45	W-619	Hex Bolt - 3/8 x 1 3/4 Lg	6
46	W-479	Hex Bolt - 3/8 x 2 1/4 Lg	6
47	C-3918	Hex Bolt - 3/8 x 5 Lg	7
48	W-490	Hex Bolt - 1/2 x 2 1/2 Lg	12
49	N19127	Lid Bolt - 1/2 x 2 3/4 Lg	3
50	N21266	Washer - Wear - 1/4 x 1 1/2 Dia	12
51	D-5488	Flatwasher - 5/16 x 11/16 OD	3
52	W-522	Lockwasher - 5/16	2
53	D-5489	Flatwasher - 3/8 x 13/16 OD	6
54	D-5579	Flatwasher - 3/8 x 1 OD	8
55	W-523	Lockwasher - 3/8	8
56	D-5277	Locknut - 1/4 Serrated (Engine Drive ONLY)	3
57	W-513	Hex Nut - 5/16	6
58	D-5272	Locknut - 5/16 Unitorque	6
59	D-5278	Locknut - 5/16 Serrated	89
60	D-5278	Locknut - 5/16 Serrated (Hydraulic Drive ONLY)	2
61	W-514	Hex Nut - 3/8	8
62	M-3388	Locknut - 3/8 Unitorque	19
63	D-5279	Locknut - 3/8 Serrated	90
64	W-516	Hex Nut - 1/2	12
65	F-3405	Locknut - 1/2 Unitorque	12
66	S-1292	Jam Nut - 1/2	6
67	N27856	Bracket - Sampler	1
68	N25457	U-Bolt - 8 15/16 Lg	2
69	N28831	Cover Plate - Meterbody (For Fine Seeds)	2
70	N29048	Hex Bolt - 5/16 x 1 Lg Stainless Steel	8
71	N29049	Wingnut - 5/16 Stainless Steel	4
72	N29335	Bracket - Manifold Valve (Variable Rate Drive ONLY)	1
73	N29479	Hex Bolt - 3/8 x 9 Lg (Variable Rate Drive ONLY)	4
74	N31609	U-Bolt - 3/8 x 1 1/2 x 2 1/8	2
75	C-333	Flatwasher - 1/2 x 1 1/2 OD (Front Tank Only)	4
	N34476	Reflector - Red (Not Shown)	2
	N34477	Reflector - Yellow (Not Shown)	4
	N34478	Reflector - Orange (Not Shown)	2
	N15094	Decal - Caution (Not Shown)	3
	N21604	Decal - Important "CORROSION" (Not Shown)	3
	N27851	Rate Chart Decal - Slow Speed - Seed (Not Shown)	1
	N27861	Rate Chart Decal - Slow Speed - Metric - Seed (Not Shown)	1
	N27852	Rate Chart Decal - Seed (Not Shown)	1
	N27862	Rate Chart Decal - Seed - Metric (Not Shown)	1
	N27853	Rate Chart Decal - Fertilizer (Not Shown)	1
	N27863	Rate Chart Decal - Fertilizer - Metric (Not Shown)	1
	N28667	Rate Chart Decal - Soybeans (Not Shown)	1
	N34281	Rate Chart Decal - Sunflowers (Not Shown)	1
	N29063	Decal - "Cover Plate" (Not Shown)	4
	N29380	Decal - "Rate Calibration" For Variable Rate Only (Not Shown)	1
	N29099	Decal - Rate Chart - Fert - Slow Speed (Not Shown)	1
	N31696	Decal - "7252 VRT"	1
	N29201	Rate Chart Decal - Fert - Slow Speed - Metric (Not Shown)	1
	N31520	Decal - "7252"	1

Hopper and Frame
7130 / 7180 Tow Behind Frame

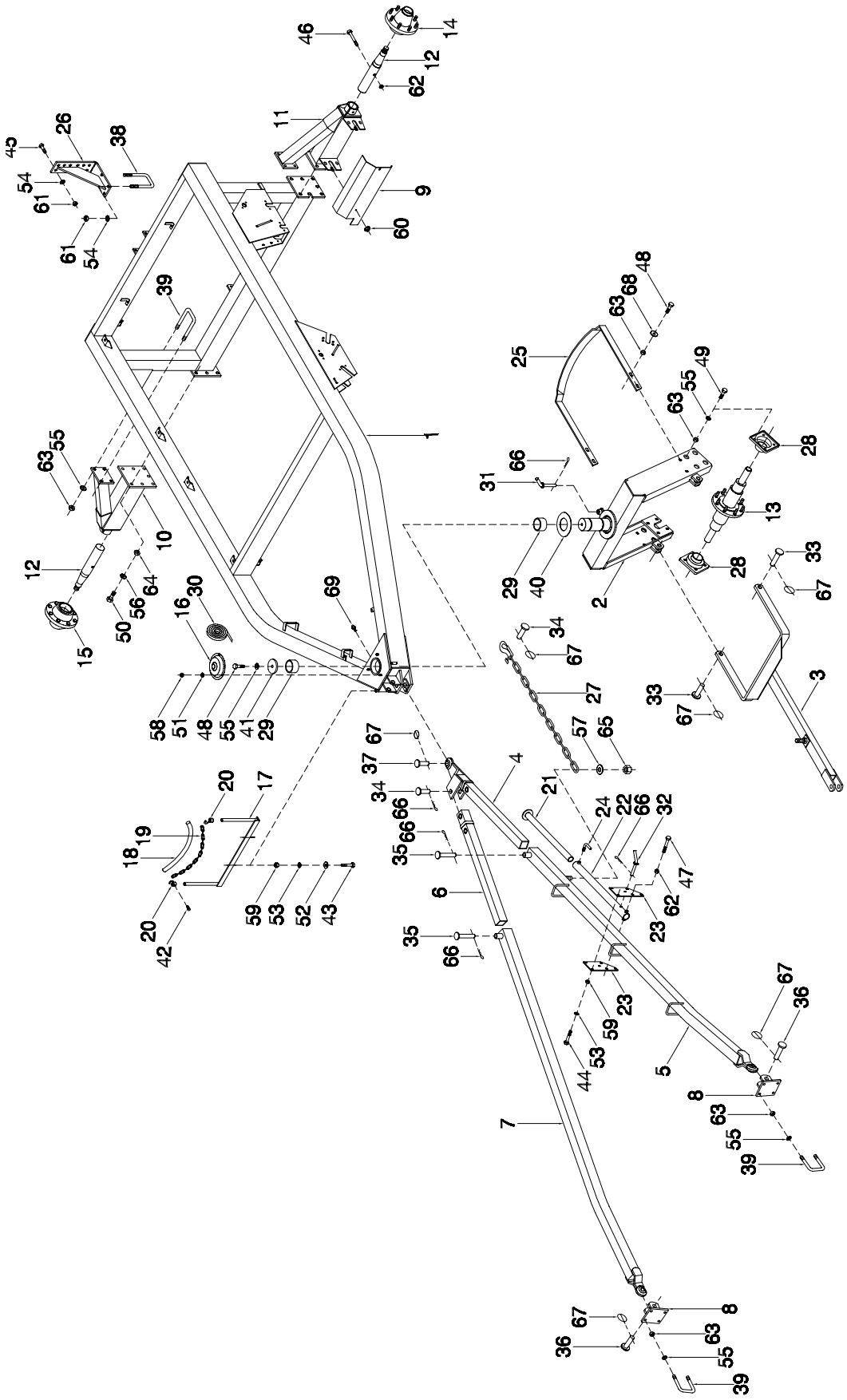

Hopper and Frame - 7130 / 7180 Tow Behind Frame

Item	Part No.	Description	Qty
1	N27000	Frame - Tow Behind	1
2	N27025	Castor Fork 7180	1
	N27725	Castor Fork 7130	1
3	N27030	Tow Hitch 7180	1
	N27730	Tow Hitch 7130	1
4	N19049	Hitch Tube - Left Inner 7130 - before Serial # 7139600279	1
		7180 - before Serial # 7189600612	1
	N29468	Hitch Tube - Left Inner	1
5	N19196	Hitch Tube - Left Outer (Straight)	1
6	N19051	Hitch Tube - Right Inner	1
7	N19054	Hitch Tube - Right Outer (Straight)	1
8	N19203	Bracket Mounting Lugs	1
9	N27070	Guard - Shaft - 22 5/8	1
10	N27001	Axle Extension - Right	1
11	N27002	Axle Extension - Left	1
12	N19166	Spindle - 2 1/2 Dia	1
13	N27035	Axle 7180	1
	N27735	Axle 7130	1
14	*****	Drive Hub Assembly (See Section 3)	1
15	*****	Non-Drive Hub Assembly (See Section 3)	1
16	N19795	Dirt Shield	1
17	N27465	Bracket - Primary Hose - 26	1
18	R480034	Hose - 1.169 OD (Bulk/ft)	1.5 ft
19	N19448	Chain - 3/16 x 80 Links	1
20	N19717	Hook - Chain	2
21	N22794	Tube - Inner	2
22	N22793	Tube - Outer	2
23	N22797	Plate - Mount	4
24	D10553	Handle	2
25	N27795	Mud Scraper - Optional 7180	1
	N27790	Mud Scraper - Optional 7130	1
26	N34742	Harrow Mount Bracket	2
27	C18760	Chain - Safety - 3/8 P-7 AG	1
28	S-1115	Flange Bearing Unit	2
29	N19794	Bushing	2
30	N21008	Seal Strip - 1/8 x 1/2	1 ft
31	D-5131	Castor Lock Pin	1
32	D-5140	Pin - Cable Lock - 5/8 Dia	2
33	W-558	Pin - 1 Dia x 2 1/4 UL	2
34	W-1628	Pin - 1 Dia x 3 3/4 UL	2
35	N19055	Pin - 1 Dia x 5 13/32 UL	2
36	N16226	Pin - Hitch - 1 1/8 Dia x 3 1/16 UL	2
37	N19368	Pin - 1 1/4 Dia x 4 UL	1
38	C-3932	U-Bolt - 1/2 x 4 x 7 1/4	4
39	C-219	U-Bolt - 5/8 x 4 x 5 9/16	8
40	N19423	Plate - Wear	1
41	N19796	Washer	1
42	C-4651	Set Screw - 1/4 x 1 Lg	2
43	W-480	Hex Bolt - 3/8 x 2 1/2 Lg	2
44	C-1550	Hex Bolt - 3/8 x 4 Lg	6
45	S-1189	Hex Bolt - 1/2 x 1 3/4 Lg	8
46	W-494	Hex Bolt - 1/2 x 3 3/4 Lg	2
47	S-951	Hex Bolt - 1/2 x 4 1/2 Lg	6
48	W-497	Hex Bolt - 5/8 x 1 1/2 Lg	5
49	W-500	Hex Bolt - 5/8 x 2 1/4 Lg	8
50	C-695	Hex Bolt - 3/4 x 2 Lg	13
51	W-522	Lockwasher - 5/16	3
52	D-5489	Flatwasher - 3/8	2
53	W-523	Lockwasher - 3/8	8
54	W-525	Lockwasher - 1/2	16
55	W-526	Lockwasher - 5/8	25
56	W-527	Lockwasher - 3/4	13
57	N19065	Flatwasher - 1 1/16	1
58	W-513	Hex Nut - 5/16	3
59	W-514	Hex Nut - 3/8	8
60	D-5279	Locknut - 3/8 Serrated	2
61	W-516	Hex Nut - 1/2	16
62	F-3405	Locknut - 1/2 Unitorque	6
63	W-517	Hex Nut - 5/8	28
64	W-518	Hex Nut - 3/4	13
65	D-5274	Locknut - 1 Unitorque	1
66	BW-11	Hair Pin - #8 - 3/16 x 3 3/4 Lg	5
67	N19307	Klik Pin - 1/4 Dia x 1 3/4 Lg	6
68	W-629	Flatwasher - 5/8	4
69	C-304	Grease Zerk - 1/8 Straight	2
	C-3902	Decal - “MORRIS” (Not Shown)	1
	N19029	Decal - “Crank Rotation Arrow” (Not Shown)	1
	N24301	Decal - “Caution - Read Manual” (Not Shown)	1
	N24412	Decal - “Important - Torque Nuts” (Not Shown)	1
	N25674	Decal - “Important - Tow Hitch” (Not Shown)	1
	N27864	Decal - “Slow Speed Hairpin Location” (Not Shown)	1
	S29378	Decal - “Danger” (Not Shown)	1
	N22800	Hitch Stand Kit (Order Through Wholegoods) (Items 21, 22, 23, 24, 32, 44, 47, 53, 59, 62, 66)	
	N20772	Harrow Mount Kit (Order Through Wholegoods) (Items 26, 38, 45, 54, 61)	

Hopper and Frame
7130 / 7180 - 2 Meter Track

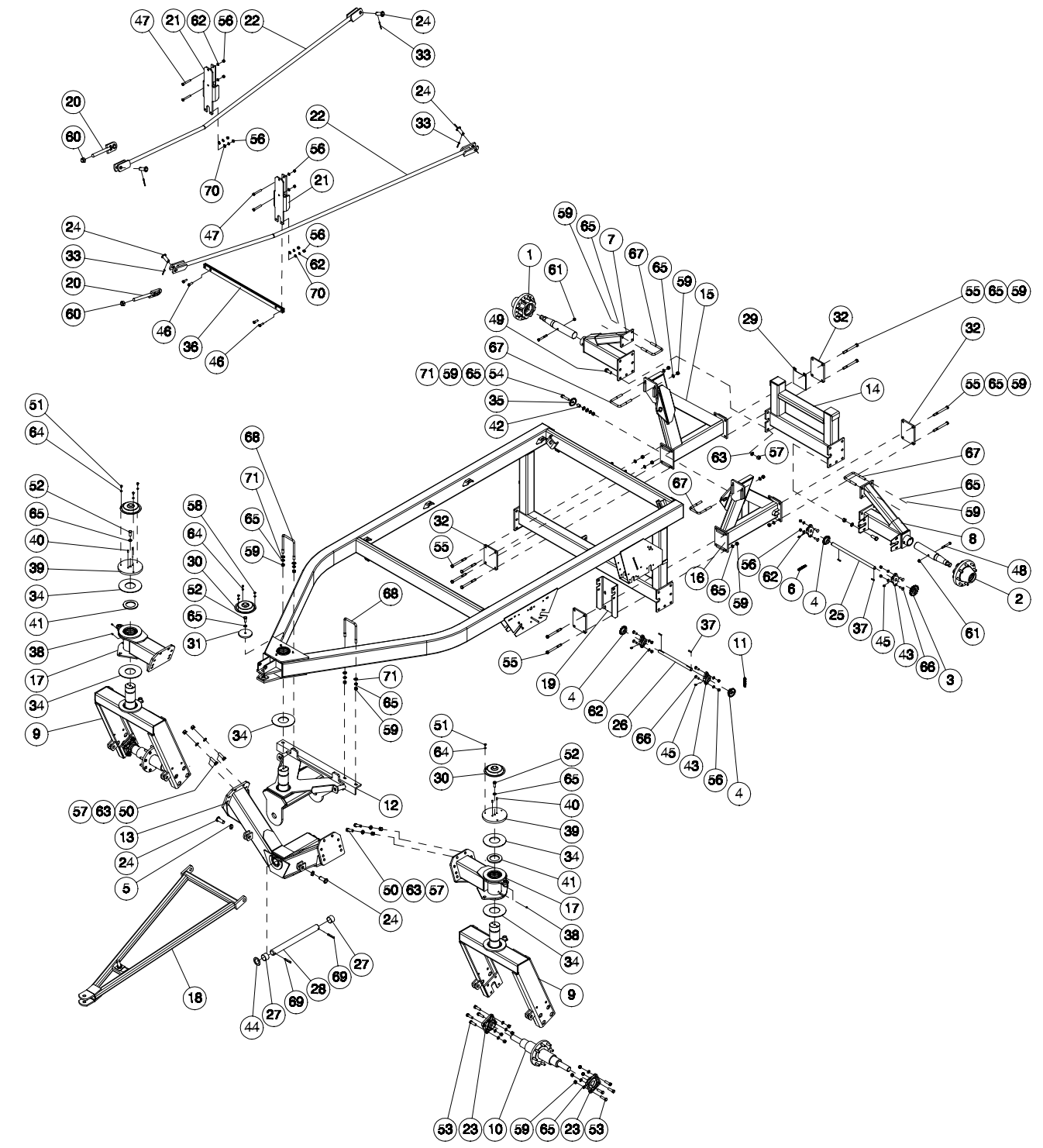

Hopper and Frame - 7130 / 7180 - 2 Meter Track

Item	Part No.	Description	Qty
1	N19173	Non Drive Hub (See Section 3)	1
2	N19174	Drive Hub (See Section 3)	1
3	N19223	Sprocket - 60B15	1
4	N19237	Sprocket - 40B18	3
5	N19307	Klik Pin - 1/4 x 1 3/4 Lg	2
6	N21081	40 Chain x 147 Link W/Connector	1
7	N27001	Axle Extension - Right	1
8	N27002	Axle Extension - Left	1
9	N27725	Castor Fork - 7130	2
9A	N27025	Castor Fork - 7180	2
10	N27735	Axle - 7130 (See Section 3)	2
10A	N27035	Axle - 7180 (See Section 3)	2
11	N27626	40 Chain x 134 Link W/Connector	1
12	N34855	Walking Axle Mount Bracket	1
13	N34860	Center Walking Axle Section	1
14	N34865	2 Meter Rear Axle Subframe	1
15	N34870	Right Axle Bracket - 2 Meter Rear	1
16	N34875	Left Axle Bracket - 2 Meter Rear	1
17	N34885	Axle Extension Stub - 2 Meter	2
18	N34905	Transport Tow Hitch	1
19	N34910	Jack Shaft Mount Channel	1
20	N34915	Truss Rod Eyebolt	2
21	N34920	Truss Tower	2
22	N34925	Truss Rod	2
23	S-1115	Flange Bearing	4
24	W-558	Pin - 1 x 2 1/4 UL	6
25	N34919	Jackshaft - 21 Lg	1
26	N34921	Jackshaft - 16 Lg	1
27	N34895	Bushing - 2 1/4 OD x 2 ID	2
28	N34890	Walking Axle Pivot Pin	1
29	N40705	Shim - 2 Meter	3
30	N19795	Dirt Shield	3
31	N34930	Retaining Washer	1
32	N40502	Mount Plate	4
33	W-4181	Cotter Pin - 1/4 x 2 Lg	4
34	N19423	Wear Plate	5
35	D17808	Sprocket Idler- 40A17 W/5/8 Bore	1
36	N34922	Tower Tie Strap	2
37	S10730	Key - 1/4 x 1/4 x 1 1/4 Lg	4
38	C-304	Grease Zerk - 1/8 MNPT Straight	6
39	N34928	Caster Drag/Retainer Plate	2
40	P106023	Pin Spiral - 3/8 x 2	4
41	N40503	Dust Seal - 3/8 Felt	2
42	N19577	Bushing - 7/8 x .657 ID	1
43	N19224	Bearing	4
44	J12279	Flat Washer - 2	1
45	F-3056	Grease Zerk - 1/4 x 90 Degree	4
46	S-1192	Hex Bolt - 1/2 x 1 1/2 Lg - Fine Thread	4
47	W-493	Hex Bolt - 1/2 x 3 1/2 Lg	4
48	W-494	Hex Bolt - 1/2 x 3 3/4 Lg	2
49	C-695	Hex Bolt - 3/4 x 2 Lg	12
50	W-509	Hex Bolt - 3/4 x 2-1/2 Lg	16
51	D-5247	Hex Bolt - 5/16 x 1/2 Lg	6
52	W-497	Hex Bolt - 5/8 x 1-1/2 Lg	3
53	W-500	Hex Bolt - 5/8 x 2-1/4 Lg	16
54	C-3016	Hex Bolt - 5/8 x 3 Lg	1
55	C-508	Hex Boxt - 5/8 x 6-1/2 Lg	16
56	W-516	Hex Nut - 1/2	16
57	W-518	Hex Nut - 3/4	28
58	W-513	Hex Nut - 5/16	3
59	W-517	Hex Nut - 5/8	49
60	D-5274	Locknut - 1 Unitorque	2
61	F-3405	Locknut - 1/2 Unitorque	2
62	W-525	Lockwasher - 1/2	16
63	W-527	Lockwasher - 3/4	28
64	W-522	Lockwasher - 5/16	9
65	W-526	Lockwasher - 5/8	52
66	H-4584	Carriage Bolt - 1/2 x 1 1/2 Lg	8
67	C-219	U-Bolt - 5/8 x 4 x 5-9/16	6
68	N34929	U-Bolt - 5/8 x 4-7/8 x 7-1/2	2
69	N34933	Spiral Pin -1/2 Dia x 2 3/4 Lg	2
70	S-1925	Flat Washer - 1/2	4
71	W-629	Flat Washer - 5/8	6
	C-3902	Decal - “MORRIS” (Not Shown)	1
	N19029	Decal - “Crank Rotation Arrow” (Not Shown)	1
	N24301	Decal - “Caution - Read Manual” (Not Shown)	1
	N24412	Decal - “Important - Torque Nuts” (Not Shown)	1
	N25674	Decal - “Important - Tow Hitch” (Not Shown)	1
	N27864	Decal - “Slow Speed Hairpin Location” (Not Shown)	1
	S29378	Decal - “Danger” (Not Shown)	1

Hopper and Frame
7130 / 7180 - 3 Meter Track

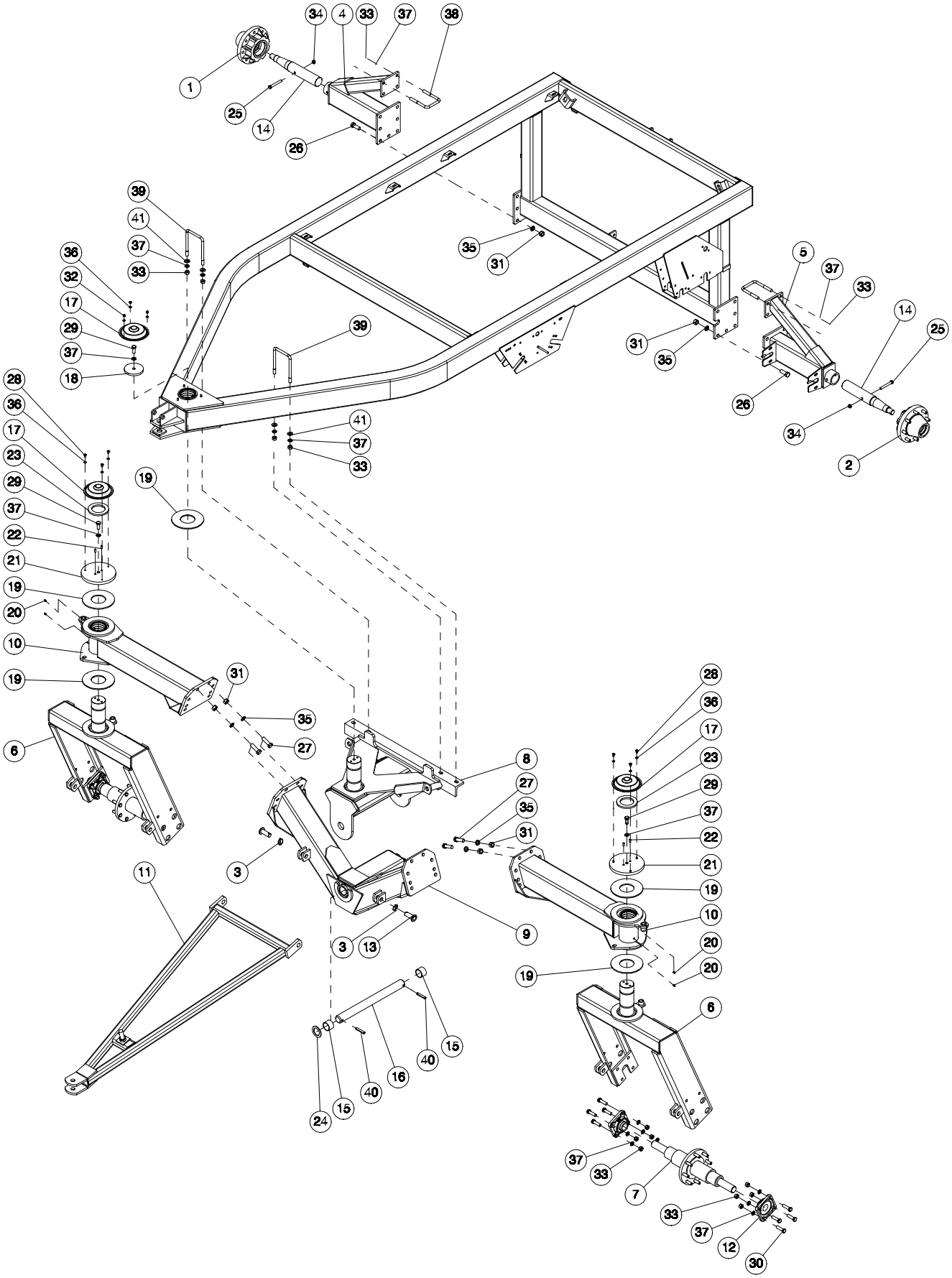

Hopper and Frame - 7130 / 7180 - 3 Meter Track

Item	Part No.	Description	Qty
1	N19173	Non Drive Hub (See Section 3)	1
2	N19174	Drive Hub (See Section 3)	1
3	N19307	Klik Pin - 1/4 x 1 3/4 Lg	2
4	N27001	Axle Extension - Right	1
5	N27002	Axle Extension - Left	1
6	N27725	Castor Fork - 7130	2
6A	N27025	Castor Fork - 7180	2
7	N27735	Axle - 7130 (See Section 3)	2
7A	N27035	Axle - 7180 (See Section 3)	2
8	N34855	Walking Axle Mount Bracket	1
9	N34860	Center Walking Axle Section	1
10	N34880	Axle Extension Stub	2
11	N34905	Transport Tow Hitch	1
12	S-1115	Flange Bearing	4
13	W-558	Pin - 1 x 2 1/4 UL	2
14	N19166	Spindle - 2 1/2 Dia	2
15	N34895	Bushing - 2 1/4 OD x 2 ID	2
16	N34890	Walking Axle Pivot Pin	1
17	N19795	Dirt Shield	3
18	N34930	Retaining Washer	1
19	N19423	Wear Plate	5
20	C-304	Grease Zerk - 1/8 MNPT Straight	6
21	N34928	Caster Drag/Retainer Plate	2
22	P106023	Pin - 3/8 x 2 Lg	4
23	N40503	Dust Seal - 3/8 Felt	2
24	J12279	Flat Washer - 2	1
25	W-494	Hex Bolt - 1/2 x 3 3/4 Lg	2
26	C-695	Hex Bolt - 3/4 x 2 Lg	12
27	W-509	Hex Bolt - 3/4 x 2-1/2 Lg	16
28	D-5247	Hex Bolt - 5/16 x 1/2 Lg	6
29	W-497	Hex Bolt - 5/8 x 1-1/2 Lg	3
30	W-500	Hex Bolt - 5/8 x 2-1/4	16
31	W-518	Hex Nut - 3/4	28
32	W-513	Hex Nut - 5/16	3
33	W-517	Hex Nut - 5/8	28
34	F-3405	Locknut - 1/2 Unitorque	2
35	W-527	Lockwasher - 3/4	28
36	W-522	Lockwasher - 5/16	9
37	W-526	Lockwasher - 5/8	31
38	C-219	U-Bolt - 5/8 x 4 x 5-9/16	4
39	N34929	U-Bolt - 5/8 x 4-7/8 x 7-1/2	2
40	N34933	Spiral Pin -1/2 Dia x 2 3/4 Lg	2
41	W-629	Flat Washer - 5/8	4
	C-3902	Decal - “MORRIS” (Not Shown)	1
	N19029	Decal - “Crank Rotation Arrow” (Not Shown)	1
	N24301	Decal - “Caution - Read Manual” (Not Shown)	1
	N24412	Decal - “Important - Torque Nuts” (Not Shown)	1
	N25674	Decal - “Important - Tow Hitch” (Not Shown)	1
	N27864	Decal - “Slow Speed Hairpin Location” (Not Shown)	1
	S29378	Decal - “Danger” (Not Shown)	1

Hopper and Frame
7240 / 7300 Tow Behind Frame

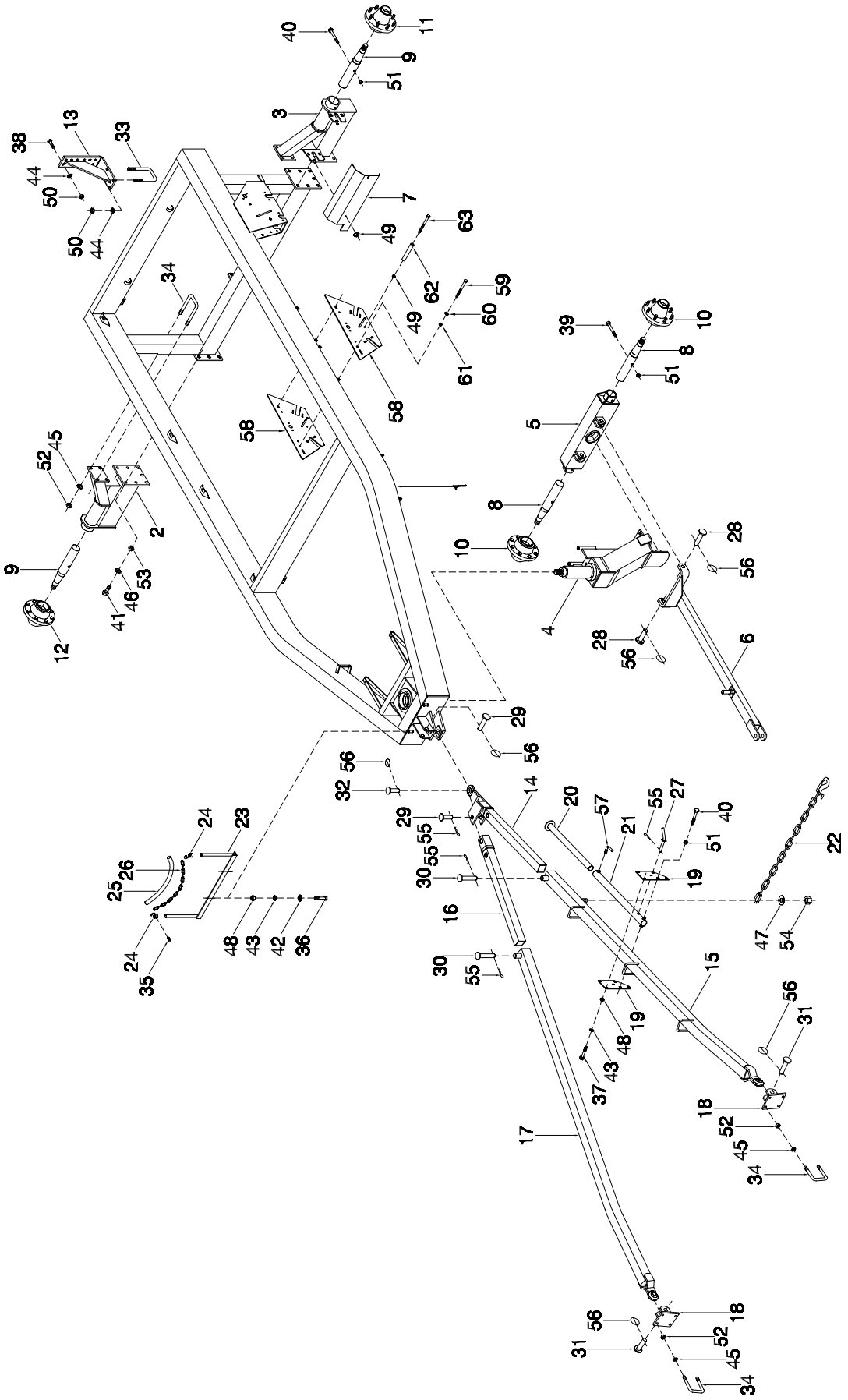

Hopper and Frame - 7240 / 7300 Tow Behind Frame

Item	Part No.	Description	Qty
1	N27059	Frame - Main - Tow Behind	1
2	N27041	Axle Extension - Right	1
3	N27042	Axle Extension - Left	1
4	N27065	Castor Fork	1
5	N21300	Axle Beam - Castor	1
6	N25475	Tow Hitch - Transport	1
7	N27070	Guard - Shaft - 22 5/8	1
8	N19166	Spindle - 2 1/2 Dia	2
9	N24775	Spindle - 3 Dia	2
	N37435	Spindle - 3 Dia - Heavy Duty	
10	* * * * *	Non-Drive Hub Assembly (See Section 3)	2
11	* * * * *	Drive Hub Assembly (See Section 3)	1
12	* * * * *	Non-Drive Hub Assembly (See Section 3)	1
13	N34742	Bracket - Harrow Mount	2
14	N29468	Hitch Tube - Inner Left	1
15	N19196	Hitch Tube - Outer Left (Straight)	1
16	N19051	Hitch Tube - Inner Right	1
17	N19054	Hitch Tube - Outer Right (Straight)	1
18	N19203	Bracket Mounting Lugs	2
19	N22797	Plate - Mount	4
20	N22794	Tube - Inner	2
21	N22793	Tube - Outer	2
22	C18760	Chain - Safety - 3/8 P-7 AG	1
23	N27465	Bracket - Primary Hose - 26	1
24	N19717	Hook - Chain	2
25	R480034	Hose - 1.169 OD (Bulk/ft)	1.5 ft
26	N19448	Chain - 3/16 x 80 Links	1
27	D-5140	Pin - Cable Lock - 5/8 Dia	2
28	W-558	Pin - 1 Dia x 2 1/4 UL	2
29	W-1628	Pin - 1 Dia x 3 3/4 UL	2
30	N19055	Pin - 1 Dia x 5 13/32 UL	2
31	N16226	Pin - Hitch - 1 1/8 Dia x 3 1/16 UL	2
32	N19368	Pin - 1 1/4 Dia x 4 UL	1
33	C-3932	U-Bolt - 1/2 x 4 x 7 1/4	4
34	C-219	U-Bolt - 5/8 x 4 x 5 9/16	8
35	C-4651	Setscrew - 1/4 x 1 Lg Square Head	2
36	W-480	Hex Bolt - 3/8 x 2 1/2 Lg	2
37	C-1550	Hex Bolt - 3/8 x 4 Lg	6
38	S-1189	Hex Bolt - 1/2 x 1 3/4 Lg	8
39	W-494	Hex Bolt - 1/2 x 3 3/4 Lg	2
40	S-951	Hex Bolt - 1/2 x 4 1/2 Lg	6
41	C-695	Hex Bolt - 3/4 x 2 Lg	14
42	D-5489	Flatwasher - 3/8	2
43	W-523	Lockwasher - 3/8	8
44	W-525	Lockwasher - 1/2	16
45	W-526	Lockwasher - 5/8	16
46	W-527	Lockwasher - 3/4	14
47	N19065	Flatwasher - 1 1/6	1
48	W-514	Hex Nut - 3/8	8
49	D-5279	Locknut - 3/8 Serrated	4
50	W-516	Hex Nut - 1/2	16
51	F-3405	Locknut - 1/2 Unitorque	8
52	W-517	Hex Nut - 5/8	16
53	W-518	Hex Nut - 3/4	14
54	D-5274	Locknut - 1 Unitorque	1
55	BW-11	Hair Pin - #8 - 3/16 x 3 3/4 Lg	5
56	N19307	Klik Pin - 1/4 Dia x 1 3/4 Lg	6
57	D10553	Handle	2
58	N27021	Transmission Plate	2
59	W-496	Hex Bolt - 1/2 x 5 1/2 Lg	2
60	S-1925	Flatwasher - 0.531 ID x 1.062 OD x 13 Ga	2
61	D14565	Locknut - 1/2 - Serrated	2
62	N31535	Spacer - 5/8 OD x .385 ID x 4 Lg	2
63	C-3918	Hex Bolt - 3/8 x 5 Lg	2
	C-3902	Decal - “MORRIS” (Not Shown)	1
	N19029	Decal - “Crank Rotation Arrow” (Not Shown)	1
	N24301	Decal - “Caution - Read Manual” (Not Shown)	1
	N24412	Decal - “Important - Torque Nuts” (Not Shown)	1
	N25674	Decal - “Important - Tow Hitch” (Not Shown)	1
	N27864	Decal - “Slow Speed Hairpin Location” (Not Shown)	1
	S29378	Decal - “Danger” (Not Shown)	1
	N22800	Hitch Stand Kit (Order Through Wholegoods) (Includes Items #19, 20, 21, 27, 37, 40, 43, 48, 51, 55 & 57)	
	N20772	Harrow Mounting Bracket Kit (Order Through Wholegoods) (Includes Items #13, 33, 38, 44 & 50)	

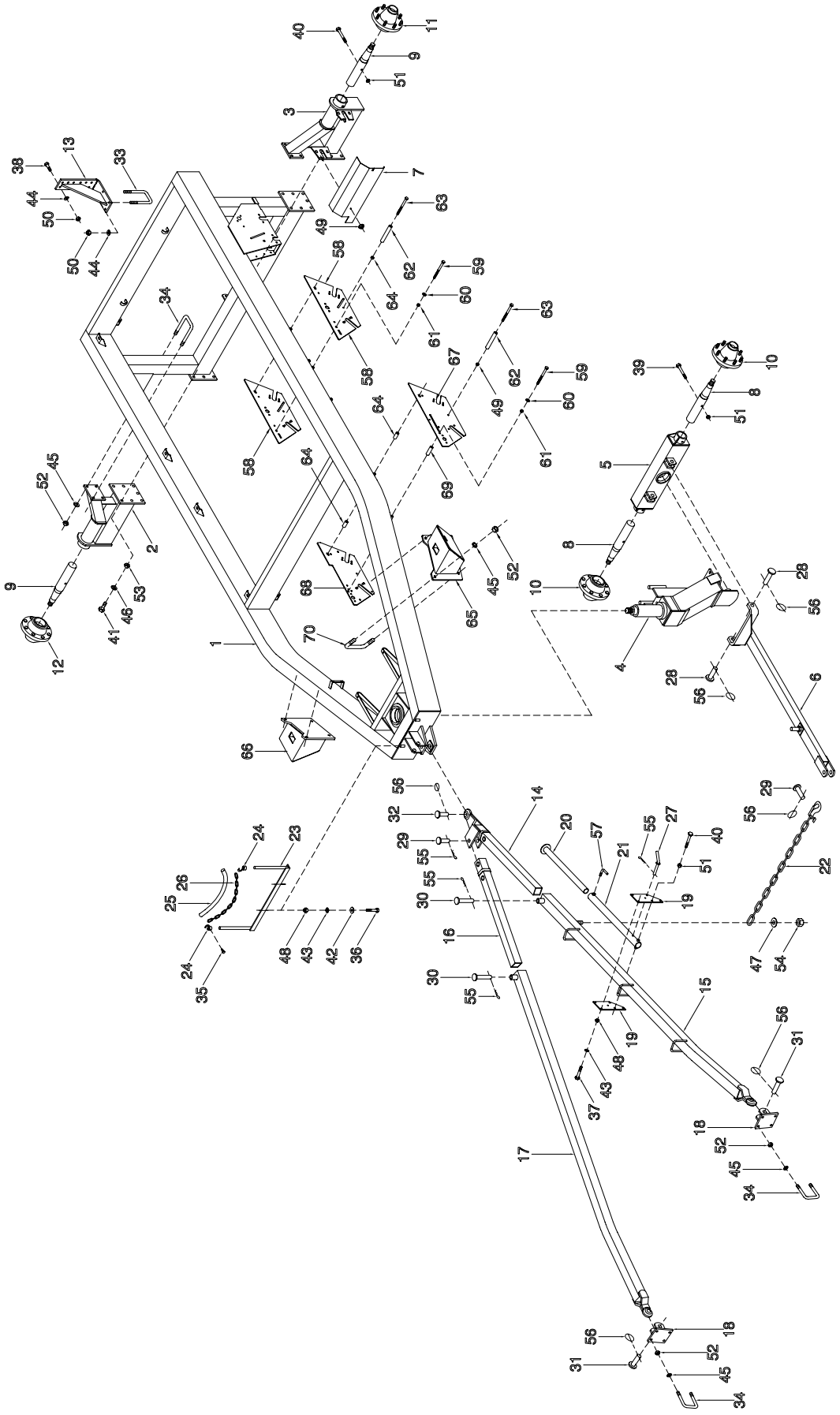

Hopper and Frame - 7252 Tow Behind Frame

Item	Part No.	Description	Qty
1	N27059	Frame - Main - Tow Behind	1
2	N27041	Axle Extension - Right	1
3	N27042	Axle Extension - Left	1
4	N27065	Castor Fork	1
5	N21300	Axle Beam - Castor	1
6	N25475	Tow Hitch - Transport	1
7	N27070	Guard - Shaft - 22 5/8	1
8	N19166	Spindle - 2 1/2 Dia	2
9	N24775	Spindle - 3 Dia	2
	N37435	Spindle - 3 Dia - Heavy Duty	
10		Non-Drive Hub Assembly (See Section 3)	2
11		Drive Hub Assembly (See Section 3)	1
12		Non-Drive Hub Assembly (See Section 3)	1
13	N34742	Bracket - Harrow Mount	2
14	N29468	Hitch Tube - Inner Left	1
15	N19196	Hitch Tube - Outer Left (Straight)	1
16	N19051	Hitch Tube - Inner Right	1
17	N19054	Hitch Tube - Outer Right (Straight)	1
18	N19203	Bracket Mounting Lugs	2
19	N22797	Plate - Mount	4
20	N22794	Tube - Inner	2
21	N22793	Tube - Outer	2
22	C18760	Chain - Safety - 3/8 P-7 AG	1
23	N27465	Bracket - Primary Hose - 26	1
24	N19717	Hook - Chain	2
25	R480034	Hose - 1169 OD (Bulk/ft)	1.5 ft
26	N19448	Chain - 3/16 x 80 Links	1
27	D-5140	Pin - Cable Lock - 5/8 Dia	2
28	W-558	Pin - 1 Dia x 2 1/4 UL	2
29	W-1628	Pin - 1 Dia x 3 3/4 UL	2
30	N19055	Pin - 1 Dia x 5 13/32 UL	2
31	N16226	Pin - Hitch - 1 1/8 Dia x 3 1/16 UL	2
32	N19368	Pin - 1 1/4 Dia x 4 UL	1
33	C-3932	U-Bolt - 1/2 x 4 x 7 1/4	4
34	C-219	U-Bolt - 5/8 x 4 x 5 9/16	8
35	C-4651	Setscrew - 1/4 x 1 Lg Square Head	2
36	W-480	Hex Bolt - 3/8 x 2 1/2 Lg	2
37	C-1550	Hex Bolt - 3/8 x 4 Lg	6
38	S-1189	Hex Bolt - 1/2 x 1 3/4 Lg	8
39	W-494	Hex Bolt - 1/2 x 3 3/4 Lg	2
40	S-951	Hex Bolt - 1/2 x 4 1/2 Lg	6
41	C-695	Hex Bolt - 3/4 x 2 Lg	14
42	D-5489	Flatwasher - 3/8	2
43	W-523	Lockwasher - 3/8	8
44	W-525	Lockwasher - 1/2	16
45	W-526	Lockwasher - 5/8	24
46	W-527	Lockwasher - 3/4	14
47	N19065	Flatwasher - 1 1/6	1
48	W-514	Hex Nut - 3/8	8
49	D-5279	Locknut - 3/8 Serrated	4
50	W-516	Hex Nut - 1/2	16
51	F-3405	Locknut - 1/2 Unitorque	8
52	W-517	Hex Nut - 5/8	24
53	W-518	Hex Nut - 3/4	14
54	D-5274	Locknut - 1 Unitorque	1
55	BW-11	Hairpin - #8 - 3/16 x 3 3/4 Lg	5
56	N19307	Klik Pin - 1/4 Dia x 1 3/4 Lg	6
57	D10553	Handle	2
58	N27021	Transmission Plate	2
59	W-496	Hex Bolt - 1/2 x 5 1/2 Lg	4
60	S-1925	Flatwasher - 0.531 ID x 1.062 OD x 13 Ga	4
61	D14565	Locknut - 1/2 - Serrated	4
62	N31535	Spacer - 5/8 OD x 0.385 ID x 4 Lg	2
63	C-3918	Hex Bolt - 3/8 x 5 Lg	2
64	N31695	Spacer - 3/4 OD x 0.532 ID x 1 Lg	2
65	N31525	Tank Mount - Left	1
66	N31530	Tank Mount - Right	1
67	N31532	Transmission Plate - Left	1
68	N31533	Transmission Plate - Right	1
69	N19058	Bushing - 1 OD x 1/2 ID x 2 Lg	1
70	N31527	U-Bolt - 5/8 x 8 1/8 x 5 9/16	4
	C-3902	Decal - “MORRIS” (Not Shown)	1
	N19029	Decal - “Crank Rotation Arrow” (Not Shown)	1
	N24301	Decal - “Caution - Read Manual” (Not Shown)	1
	N24412	Decal - “Important - Torque Nuts” (Not Shown)	1
	N25674	Decal - “Important - Tow Hitch” (Not Shown)	1
	N27864	Decal - “Slow Speed Hairpin Location” (Not Shown)	1
	S29378	Decal - “Danger” (Not Shown)	1
	N22800	Hitch Stand Kit (Order Through Wholegoods) (Includes Items #19, 20, 21, 27, 37, 40, 43, 48, 51, 55 & 57)	
	N20772	Harrow Mounting Bracket Kit (Order Through Wholegoods) (Includes Items #13, 33, 38, 44 & 50)	

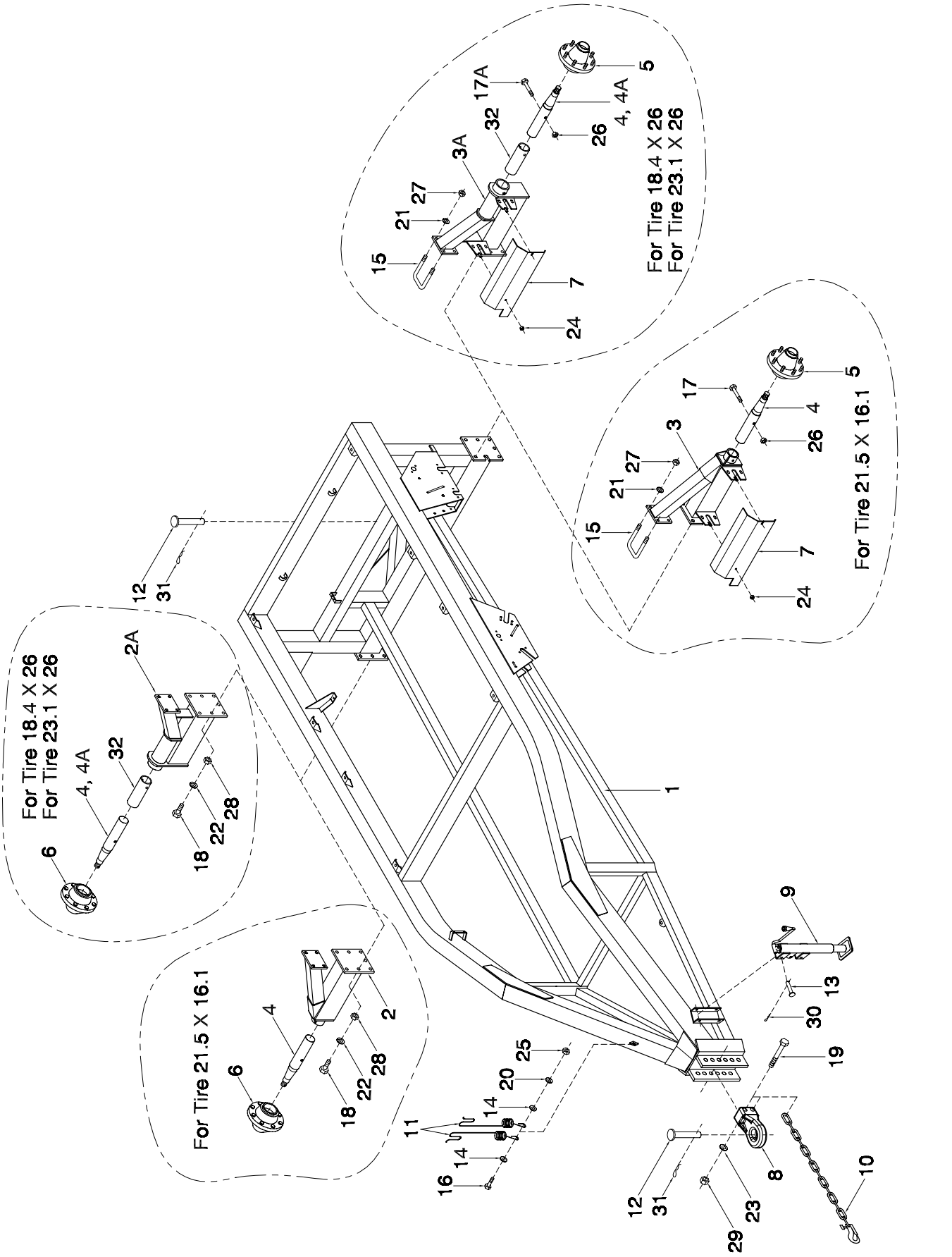
For Tire 18.4 X 26
For Tire 23.1 X 26
For Tire 21.5 X 16.1
For Tire 18.4 X 26
For Tire 23.1 X 26
For Tire 21.5 X 16.1

Hopper and Frame - 7180 Tow Between Frame

Item	Part No.	Description	Qty
1	N27020	Frame - Tow Between (Standard)	1
	N28370	Frame - Tow Between (Three Point Hitch) 7180 Only	1
2	N27001	Axle Extension - Right (For Tire 21.5 x 16.1 Only)	1
2A	N27041	Axle Extension - Right (For Tire 18.4 x 26 and 23.1 x 26)	1
3	N27002	Axle Extension - Left (For Tire 21.5 x 16.1 Only)	1
3A	N27042	Axle Extension - Left (For Tire 18.4 x 26 and 23.1 x 26)	1
4	N19166	Spindle - 2 1/2 Dia	2
4A	N24775	Spindle - 3 Dia (For Tire 23.1 x 26 Only)	2
	N37435	Spindle - 3 Dia - Heavy Duty	
5		Drive Hub Assembly (See Section 3)	1
6		Non-Drive Hub Assembly (See Section 3)	1
7	N27070	Jackshaft Guard	1
8	N33748	Clevis - Cast (After Serial # 7280200701)	1
8a	N33749	Clevis - Cast/slotted hole (Serial # 7280200701 & Prior) (Replaces welded clevis N13926)	1
9	H27963	Hitch Jack - Top Wind - 7,000 lb	1
10	C18761	Safety Chain - 40,000 lb	1
11	W-7	Hose Holder	2
12	N15049	Hitch Pin - 1 1/2 x 6 1/2 UL	1
13	H10462	Clevis Pin - 0.612 x 3 5/8 UL	2
14	C-333	Hose Holder Washer	2
15	C-219	U-Bolt - 5/8 x 4 x 5 9/16 UL	4
16	W-488	Hex Bolt - 1/2 x 2 Lg	1
17	W-494	Hex Bolt - 1/2 x 3 3/4 Lg (For 2-1/2 Dia. Spindle)	2
17A	S-951	Hex Blot - 1/2 x 4 1/2 Lg (For 3 Dia Spindle)	2
18	C-695	Hex Bolt - 3/4 x 2 Lg	13
19	C18597	Hex Bolt - 1 x 8 Lg	3
20	W-525	Lockwasher - 1/2	1
21	W-526	Lockwasher - 5/8	8
22	W-527	Lockwasher - 3/4	13
23	C-705	Lockwasher - 1	3
24	D-5279	Serrated Locknut - 3/8	2
25	W-516	Hex Nut - 1/2	1
26	F-3405	Unitorque Locknut - 1/2	2
27	W-517	Hex Nut - 5/8	8
28	W-518	Hex Nut - 3/4	13
29	W-520	Hex Nut - 1	3
30	W-131	Hair Pin - #9 - 0.148 x 3 5/16	2
31	P1318510	Hair Pin - #19 - 1/4 x 4 3/8	1
32	N28930	Spacer - 2 1/2 Spindle (For Tire 18.4 x 26 Only)	2
	C-3902	Decal - “MORRIS” (Not Shown)	1
	N19029	Decal - “Crank Rotation Arrow” (Not Shown)	1
	N24301	Decal - “Caution - Read Manual” (Not Shown)	1
	N24412	Decal - “Important - Torque Nuts” (Not Shown)	1
	N27864	Decal - “Slow Speed Hairpin Location” (Not Shown)	1

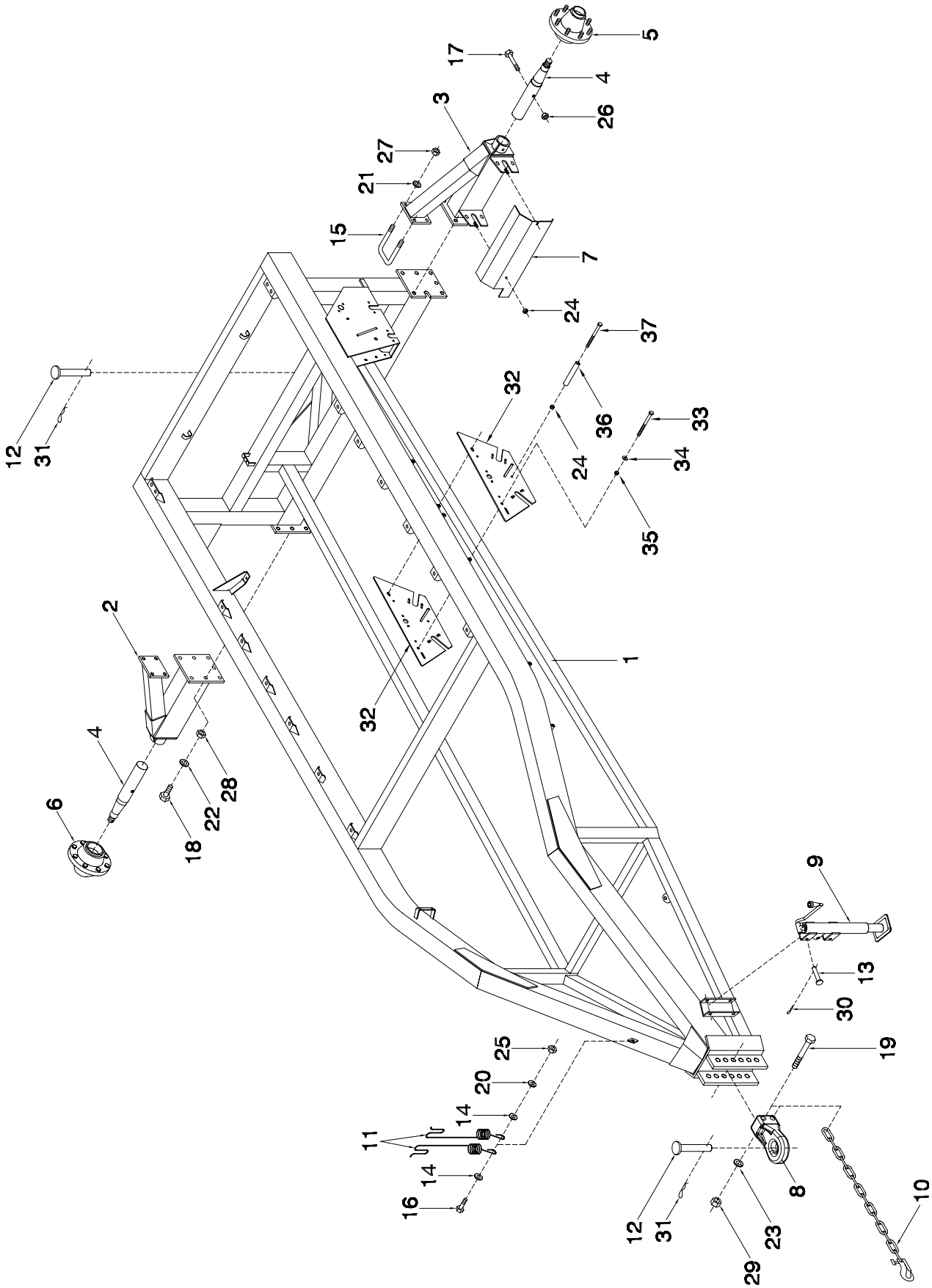
5
17
4
26
3
27
21
15
7
24
37
32
36
33
24
34
35
12
31
2
1
32
4
6
28
22
18
9
13
30
19
25
20
14
11
14
16
8
12
31
23
29
10

Hopper and Frame - 7240 / 7300 Tow Between Frame

Item	Part No.	Description	Qty
1	N27060	Frame - Tow Between (Standard)	1
	N28375	Frame - Tow Between (Three Point Hitch) 7240 Only	1
2	N27041	Axle Extension - Right	1
3	N27042	Axle Extension - Left	1
4	N24775	Spindle - 3 Dia	2
	N37435	Spindle - 3 Dia - Heavy Duty	
5		Drive Hub Assembly (See Section 3)	1
6		Non-Drive Hub Assembly (See Section 3)	1
7	N27070	Jackshaft Guard	1
8	N33748	Clevis - Cast (After Serial # 7230202338 for 7240)	1
		(After Serial # 7330203126 for 7300)	
8a	N33749	Clevis - Cast/slotted hole (Serial # 7230202338 & Prior for 7240)	1
		(Serial # 7330203126 & Prior for 7300)	
		(Replaces welded clevis N13926)	
9	H27963	Hitch Jack - Top Wind - 7,000 lb	1
10	C18761	Safety Chain - 40,000 lb	1
11	W-7	Hose Holder	2
12	N15049	Hitch Pin - 1 1/2 x 6 1/2 UL	2
13	H10462	Clevis Pin - 0.612 x 3 5/8 UL	2
14	C-333	Hose Holder Washer	2
15	C-219	U-Bolt - 5/8 x 4 x 5 9/16 UL	4
16	W-488	Hex Bolt - 1/2 x 2 Lg	1
17	S-951	Hex Bolt - 1/2 x 4 1/2 Lg	2
18	C-695	Hex Bolt - 3/4 x 2 Lg	14
19	C18597	Hex Bolt - 1 x 8 Lg	3
20	W-525	Lockwasher - 1/2	1
21	W-526	Lockwasher - 5/8	8
22	W-527	Lockwasher - 3/4	14
23	C-705	Lockwasher - 1	3
24	D-5279	Serrated Locknut - 3/8	3
25	W-516	Hex Nut - 1/2	1
26	F-3405	Unitorque Locknut - 1/2	2
27	W-517	Hex Nut - 5/8	8
28	W-518	Hex Nut - 3/4	14
29	W-520	Hex Nut - 1	3
30	W-131	Hair Pin - #9 - 0.148 x 3 5/16	2
31	P1318510	Hair Pin - #19 - 1/4 x 4 3/8	2
32	N27021	Transmission Plate	2
33	W-496	Hex Bolt - 1/2 x 5 1/2 Lg	2
34	S-1925	Flatwasher - 0.531 ID x 1.062 OD x 13 Ga	2
35	D14565	Locknut - 1/2 - Serrated	2
36	N31535	Spacer - 5/8 OD x 0.385 ID x 4 Lg	1
37	C-3918	Hex Bolt - 3/8 x 5 Lg	1
	C-3902	Decal - “MORRIS” (Not Shown)	1
	N19029	Decal - “Crank Rotation Arrow” (Not Shown)	1
	N24301	Decal - “Caution - Read Manual” (Not Shown)	1
	N24412	Decal - “Important - Torque Nuts” (Not Shown)	1
	N27864	Decal - “Slow Speed Hairpin Location” (Not Shown)	1

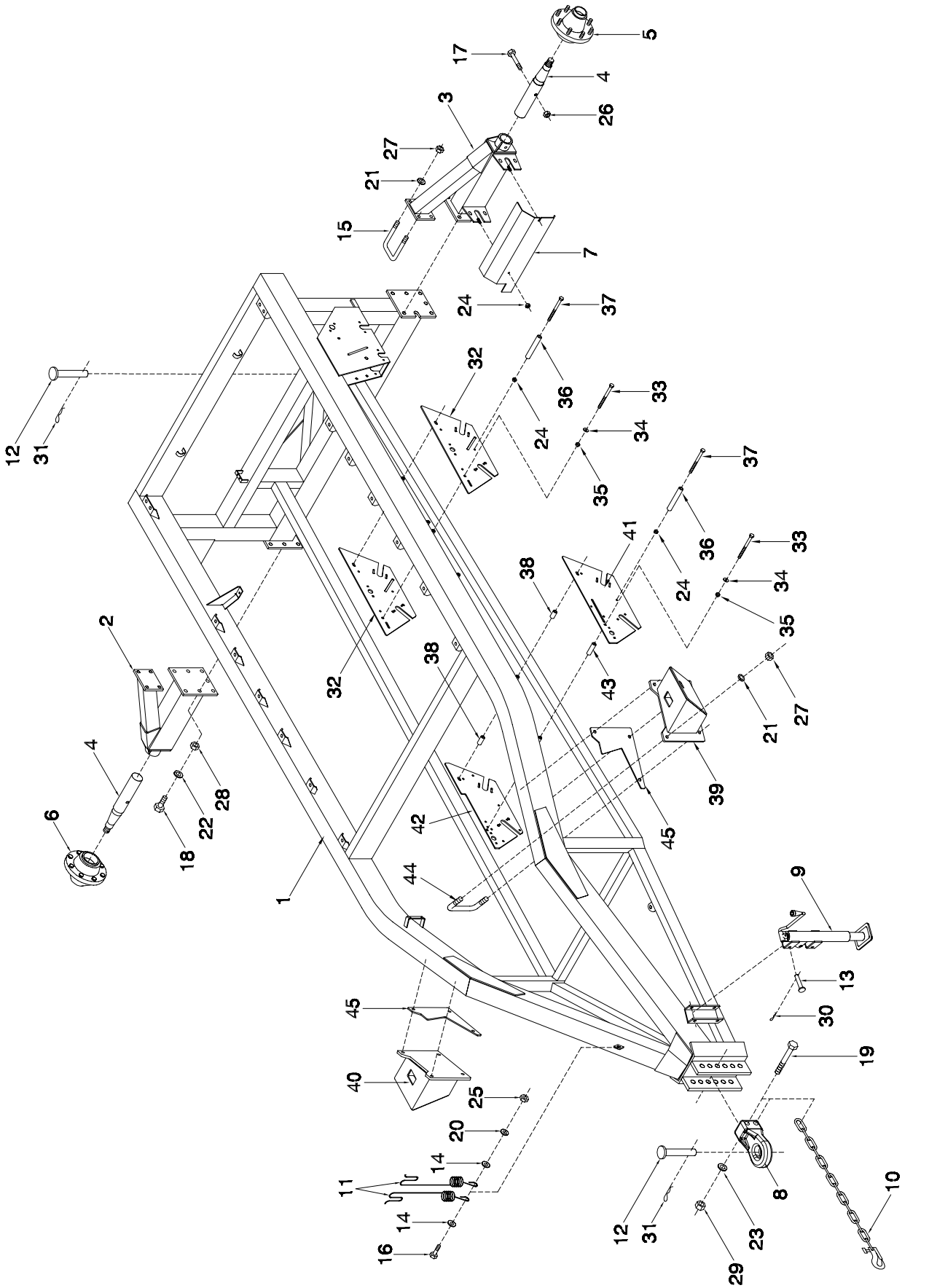
1
2
3
4
5
6
7
8
9
10
11
12
13
14
15
16
17
18
19
20
21
22
23
24
25
26
27
28
29
30
31
32
33
34
35
36
37
38
39
40
41
42
43
44
45

Hopper and Frame - 7252 Tow Between Frame

Item	Part No.	Description	Qty
1	N27060	Frame - Tow Between	1
2	N27041	Axle Extension - Right	1
3	N27042	Axle Extension - Left	1
4	N24775	Spindle - 3 Dia	2
	N37435	Spindle - 3 Dia - Heavy Duty	
5		Drive Hub Assembly (See Section 3)	1
6		Non-Drive Hub Assembly (See Section 3)	1
7	N27070	Jackshaft Guard	1
8	N33748	Clevis - Cast (After Serial # 7530101126)	1
8a	N33749	Clevis - Cast/slotted hole (Serial # 7530101126 & Prior) (Replaces welded clevis N13926)	1
9	H27963	Hitch Jack - Top Wind - 7,000 lb	1
10	C18761	Safety Chain - 40,000 lb	1
11	W-7	Hose Holder	2
12	N15049	Hitch Pin - 1 1/2 x 6 1/2 UL	2
13	H10462	Clevis Pin - 0.612 x 3 5/8 UL	2
14	C-333	Hose Holder Washer	2
15	C-219	U-Bolt - 5/8 x 4 x 5 9/16 UL	4
16	W-488	Hex Bolt - 1/2 x 2 Lg	1
17	S-951	Hex Bolt - 1/2 x 4 1/2 Lg	2
18	C-695	Hex Bolt - 3/4 x 2 Lg	14
19	C18597	Hex Bolt - 1 x 8 Lg	3
20	W-525	Lockwasher - 1/2	1
21	W-526	Lockwasher - 5/8	8
22	W-527	Lockwasher - 3/4	14
23	C-705	Lockwasher - 1	3
24	D-5279	Serrated Locknut - 3/8	4
25	W-516	Hex Nut - 1/2	1
26	F-3405	Unitorque Locknut - 1/2	2
27	W-517	Hex Nut - 5/8	16
28	W-518	Hex Nut - 3/4	14
29	W-520	Hex Nut - 1	3
30	W-131	Hair Pin #9 - 0.148 x 3 5/16	2
31	P1318510	Hair Pin - #19 - 1/4 x 4 3/8	2
32	N27021	Transmission Plate	2
33	W-496	Hex Bolt - 1/2 x 5 1/2 Lg	4
34	S-1925	Flatwasher - 0.531 ID x 1.062 OD x 13 Ga	4
35	D14565	Locknut - 1/2 - Serrated	4
36	N31535	Spacer - 5/8 OD x 0.385 ID x 4 Lg	2
37	C-3918	Hex Bolt - 3/8 x 5 Lg	2
38	N31695	Spacer - 3/4 OD x 0.532 ID x 1 Lg	2
39	N31525	Tank Mount - Left	1
40	N31530	Tank Mount - Right	1
41	N31532	Transmission Plate - Left	1
42	N31533	Transmission Plate - Right	1
43	N19058	Bushing - 1 OD x 1/2 ID x 2 Lg	1
44	N31527	U-Bolt - 5/8 x 8 1/8 x 5 9/16	4
45	N31531	Shim Plate - 1/4	2
	C-3902	Decal - “MORRIS” (Not Shown)	1
	N19029	Decal - “Crank Rotation Arrow” (Not Shown)	1
	N24301	Decal - “Caution - Read Manual” (Not Shown)	1
	N24412	Decal - “Important - Torque Nuts” (Not Shown)	1
	N27864	Decal - “Slow Speed Hairpin Location” (Not Shown)	1

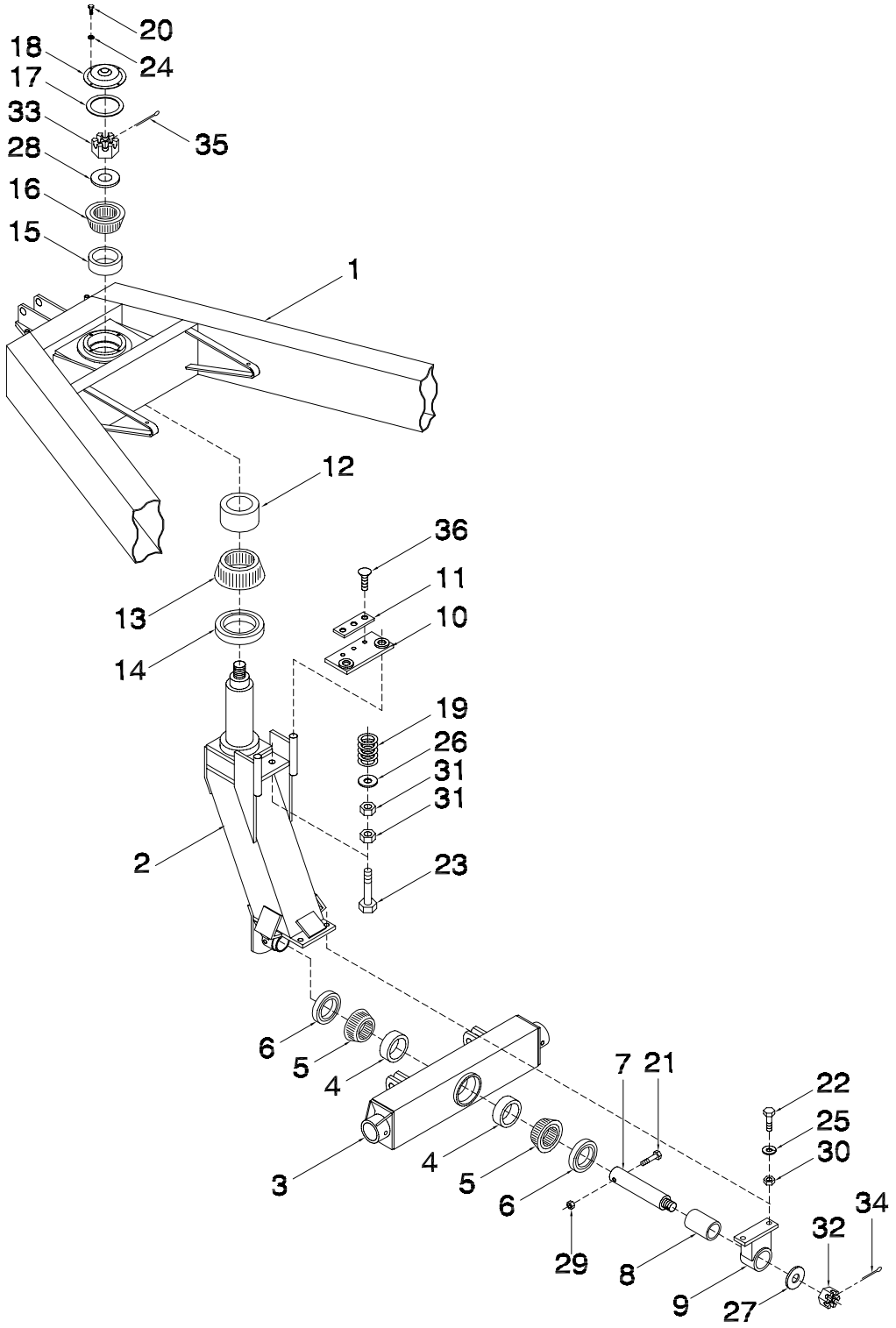
20
18
24
17
33
35
28
16
15
1
12
36
11
13
10
14
19
26
31
31
2
23
6
5
4
7
21
22
25
30
3
4
5
6
34
32
29
8
9
27

Hopper and Frame - 7240 / 7252 / 7300 Castor Fork

Item	Part No.	Description	Qty
1	N27059	Main Frame (Partial Front View)	1
2	N27065	Castor Fork	1
3	N21300	Axle Beam - Castor	1
4	N16028	Bearing Cup - Inner - #3720	2
5	N16030	Bearing Cone - Inner - #3780	2
6	N16032	Dust Seal - C/R #25100	2
7	N21712	Shaft - Castor Equalizer - 2 x 10 5/8	1
8	N21709	Bushing - 2 1/2 OD x 2 ID x 3 3/8 Lg	1
9	N21711	Pivot Bracket	1
10	N25460	Guide - Brake Support	1
11	N25465	Brake Pad - Castor	1
12	N21716	Bearing Cup - Inner	1
13	N21717	Bearing Cone - Inner	1
14	N21718	Dust Seal - C/R #50148	1
15	N13951	Bearing Cup - Inner - #39520	1
16	N13954	Bearing Cone - Inner - #39585	1
17	N13959	Rubber Gasket - #SE-49	1
18	N13957	Dust Cap - #DC-27	1
19	N19596	Spring - 1 1/2 OD x 2 1/2 Lg - Brake	2
20	K-3830	Hex Bolt - 1/4 x 1/2 Lg	4
21	W-493	Hex Bolt - 1/2 x 3 1/2 Lg	1
22	W-499	Hex Bolt - 5/8 x 2 Lg	2
23	N19482	Hex Bolt - 3/4 x 3 1/4 Lg	2
24	W-521	Lockwasher - 1/4	4
25	W-526	Lockwasher - 5/8	2
26	W-476	Flatwasher - 3/4	2
27	N13962	Washer - 2 1/2 OD x 2 1/4 ID x 1/4	1
28	N28789	Washer - 3 1/2 OD x 1 17/32 ID x 7/16	1
29	F-3405	Locknut - 1/2 Unitorque	1
30	W-517	Hex Nut - 5/8	2
31	W-575	Hex Jam Nut - 3/4	4
32	N19484	Slotted Nut - 1 1/4-12 UNF	1
33	N21728	Slotted Nut - 1 1/2	1
34	D-5239	Cotter Pin - 1/4 x 2 1/4 Lg	1
35	N11575	Cotter Pin - 1/4 x 3 Lg	1
36	N25463	Capscrew - 3/8-24 UNF x 3/4 Lg	3

Notes

Section 2: Metering

Section Contents

Metering Drive - 7130 / 7180 / 7240 / 7300 2-2
Metering Drive - 7252 2-6
Metering Body 2-10
Coated Metering Body 2-11
Optional Fertilizer Banding Kit - Rear 2-12
Optional Fertilizer Banding Kit - Front 2-13
Optional Remote Clutch Switch - Brylite Ends 2-14
Optional Remote Clutch Switch - Weather Pak Ends 2-16
Remote Clutch Switch - Xpress 2-18
Remote Clutch Switch - Maxim III 2-19
Optional Clutch 2-20

Metering
Metering Drive - 7130 / 7180 / 7240 / 7300

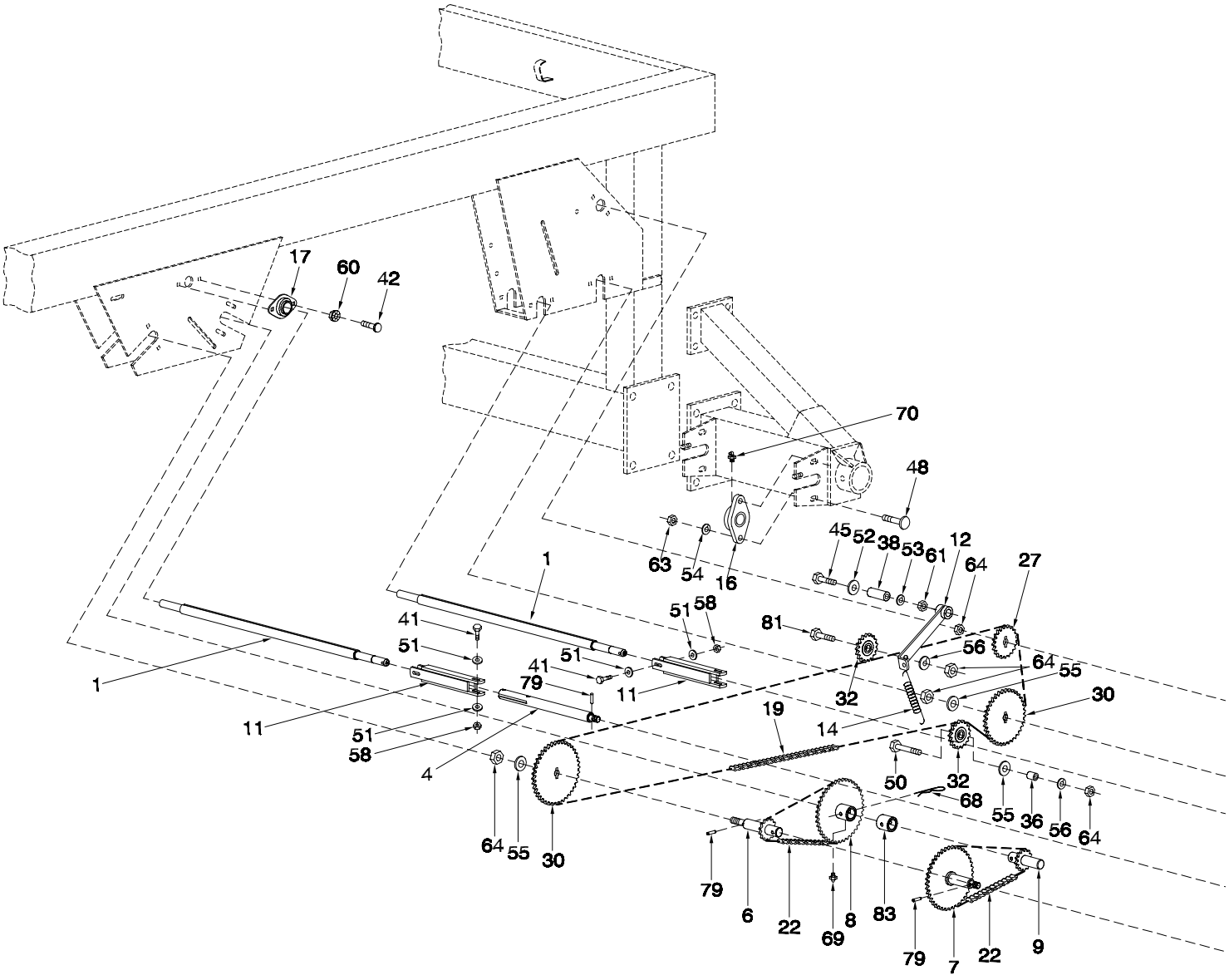

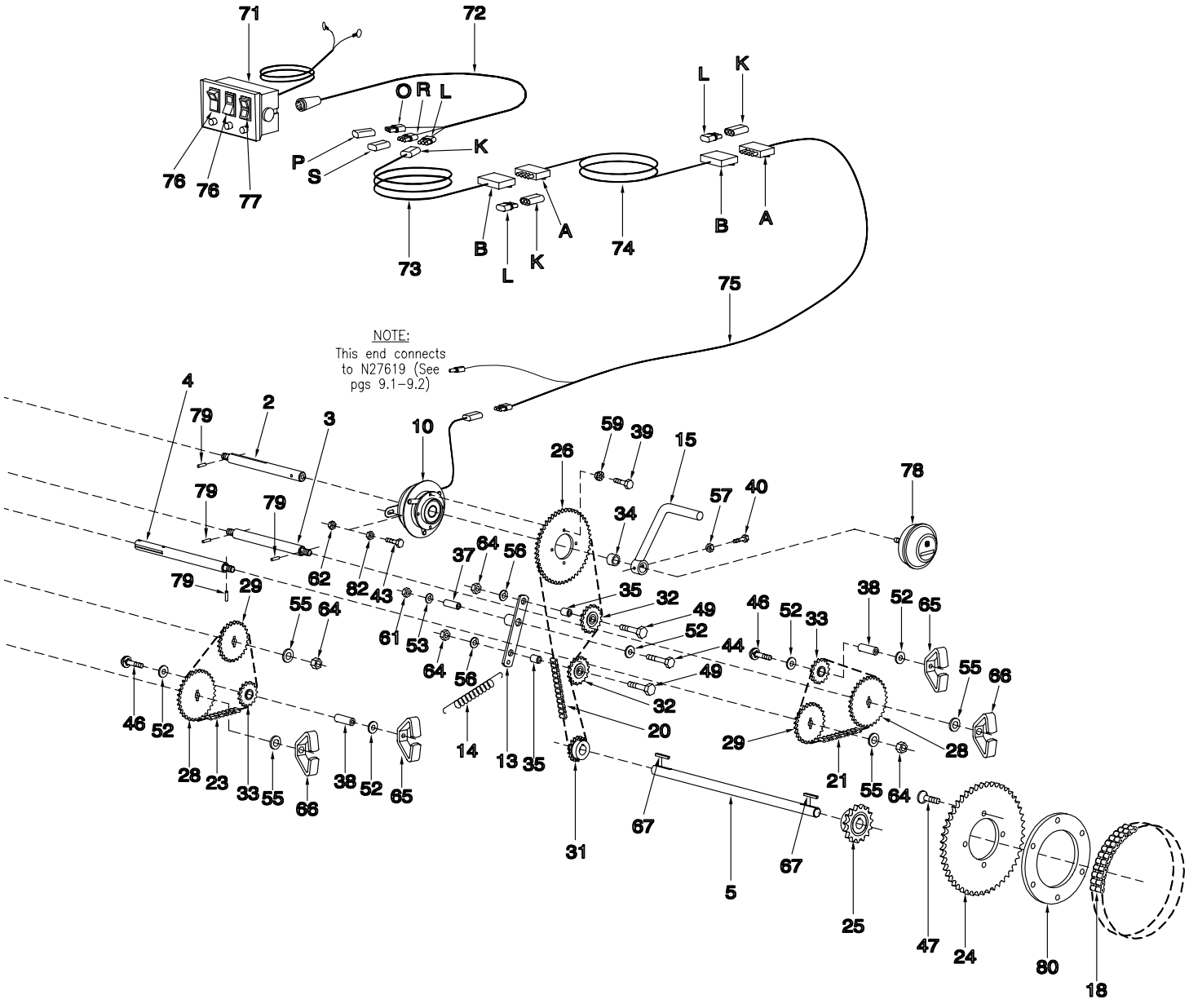
NOTE:
This end connects to N27619 (See pgs 9.1–9.2)

Metering - Metering Drive - 7130 / 7180 / 7240 / 7300

Item	Part No.	Description	Qty
1	N19687	Metering Shaft - 8 Outlet	2
2	N27400	Shaft - Clutch - (P-Drive)	1
3	N27401	Shaft - Rate Change - (P-Drive)	1
4	N42166	Shaft - Meter End	2
	N27402	Shaft - Meter End - (P-Drive) required for auxilary clutch kit	
5	N24782	Jackshaft - 23 3/4 Lg	1
6	N27403	Shaft - Slow Speed - 13T - (P-Drive)	1
7	N27404	Shaft - Slow Speed - 40T - (P-Drive)	1
8	N27406	Shaft - Reducer - 40T - (P-Drive)	1
9	N27405	Shaft - Reducer - 13T - (P-Drive)	1
10	N16862	Electric Clutch - 12 Volt	1
11	N21288	Coupler - Metering - 7 15/16 Lg	2
12	N19261	Arm - Idler	1
13	N19288	Arm - Idler	1
14	W-1663	Spring - 23/32 OD x 7 9/16 Lg	2
15	N27600	Crank - Calibration (Zinc Plated)	1
16	N19224	Bearing - 2 Bolt Flushmount	2
17	N27411	Flangette Bearing - 1 Bore - (SP)	12
18	N19220	Chain - #60 x 48 Link w/Connector - Double Strand	1
	N19221	Chain Connector - #60 - Double Strand (Not Shown)	1
19	N27628	Chain - #40 x 311 Link w/Connector & Offset Link 7130	1
	N27627	Chain - #40 x 307 Link w/Connector & Offset Link 7180 - 21.5 x 16.1 Tires	1
	N28296	Chain - #40 x 301 Link w/Connector & Offset Link 7180 - 18.4 x 26 Tires	1
	N27629	Chain - #40 x 347 Link w/Connector & Offset Link 7240 / 7300	1
20	N27626	Chain - #40 x 134 Link w/Connector 7130 / 7180	1
	N27630	Chain - #40 x 115 Link w/Connector & Offset Link 7240 / 7252 / 7300	1
21	N16903	Chain - #40 x 70 Link w/Connector	1
22	N16113	Chain - #40 x 69 Link w/Connector & Offset Link	2
23	N19258	Chain - #40 x 64 Link w/Connector	1
		S10954 - Connector #40 Chain S10955 - Offset Connector #40 Chain (Not Shown)	
24	N19219	Sprocket - 60A48 - 4 3/8 Dia Bore 7130 / 7180	1
	N24774	Sprocket - 60A48 - 6 Dia Bore 7180 Tire Option 23.1 x 26 / 7240 / 7300	1
25	N19223	Sprocket - 60B15	1
26	N27410	Sprocket - 40A48 (Clutch)	1
27		See NOTE “A” on next page	
28		See NOTE “B” on next page	
29	N27425	Sprocket - 40A25 - (P-Drive)	2
30	N27440	Sprocket - 40A40 - (P-Drive) 7130	2
	N27435	Sprocket - 40A35 - (P-Drive) 7180 - Tire Option 21.5 x 16.1	2
	N27428	Sprocket - 40A28 - (P-Drive) 7180 - Tire Option 18.4 x 26	2
	N27426	Sprocket - 40A26 - (P-Drive) 7180 - Tire Option 23.1 x 26 / 7240 / 7300 w/All Weather Tires	2
	N27424	Sprocket - 40A24 - (P-Drive) 7240 / 7300 with Rice Tires	2
31	N19237	Sprocket - 40B18 - (Drive)	1
32	D17808	Idler Sprocket - 40A17 w/5/8 Bore	4
33	D-5234	Nylon Idler - 40B15	2
34	N19232	Spacer - 23/32 Lg	1
35	N19577	Bushing - 7/8 Lg	2
36	D-5011	Bushing - Spacer - 1 9/16 Lg	1
37	N16156	Spacer - 2 1/8 Lg	1
38	N19460	Bushing - 2 1/2 Lg	3
39	W-469	Hex Bolt - 1/4 x 3/4 Lg	4
40	W-1540	Hex Bolt - 1/4 x 2 Lg	1
41	N22777	Hex Bolt - 1/4 x 2 1/4 Lg - Gr8	4
42	D-5259	Carriage Bolt - 5/16 x 3/4 Lg	24
43	W-187	Hex Bolt - 3/8 x 1 1/4 Lg	1
44	W-1854	Hex Bolt - 3/8 x 3 Lg	1
45	D-5249	Hex Bolt - 3/8 x 3 1/4 Lg	1
46	N19283	Carriage Bolt - 3/8 x 3 1/2 Lg	2
47	N19230	Countersunk Machine Screw - 1/2-20 UNF x 1 Lg 7130 / 7180	4
	N24780	Countersunk Machine Screw - 1/2-20 UNF x 1 3/4 Lg 7240 / 7300	4
48	H-4584	Carriage Bolt - 1/2 x 1 1/2 Lg	4
49	W-501	Hex Bolt - 5/8 x 2 1/2 Lg	2
50	W-503	Hex Bolt - 5/8 x 3 1/2 Lg	1
51	S-1198	Flatwasher - 1/4	8
52	N19706	Flatwasher - 3/8	6
53	W-523	Lockwasher - 3/8	2
54	W-525	Lockwasher - 1/2	4
55	W-793	Flatwasher - 5/8	7
56	W-526	Lockwasher - 5/8	4

Metering - Metering Drive - 7130 / 7180 / 7240 / 7300

Item	Part No.	Description	Qty
57	N15757	Locknut - 1/4	1
58	N22778	Locknut - 1/4 w/Nylon Insert	4
59	D-5277	Serrated Locknut - 1/4	4
60	D-5278	Serrated Locknut - 5/16	24
61	W-514	Hex Nut - 3/8	2
62	M-3388	Unitorque Locknut - 3/8	1
63	W-516	Hex Nut - 1/2	4
64	W-517	Hex Nut - 5/8	9
65	N27350	Wing Nut - 3/8 (7000 Series)	2
66	N27370	Wing Nut - 5/8 (7000 Series)	2
67	S10730	Key - 1/4 x 1/4 x 1 1/4 Lg	2
68	P1318510	Hair Pin - #19 - 1/4 x 4 3/8 Lg	1
69	S-752	Grease Zerk - 1/4 Straight	2
70	F-3056	Grease Zerk - 1/4 x 90	2
71	N27011	Clutch Switch - Main (7000 Series)(Fuse 7.5 amp - N30594)	1
72	N27012	Clutch Wire - Extension - 8 ft	1
73	N27013	Clutch Wire - Extension - 16 ft (Brylite)	1
	N32456	Clutch Wire - Extension - 16 ft (Weather Pak)	1
74	N16893	Wire - Clutch Extension(Brylite) Tow Behind Only	1
	N32457	Wire - Clutch Extension(Weather Pak) Tow Behind Only	1
75	N27014	Clutch Wire (Brylite) 7130 / 7180	1
	N32466	Clutch Wire (Weather Pak) 7130 / 7180	1
	N27015	Clutch Wire (Brylite) 7240 / 7252 / 7300	1
	N32467	Clutch Wire (Weather Pak) 7240 / 7252 / 7300	1
76	N29382	Clutch Rocker Switch - 2 Way - #83301	2
77	N29383	Granular Rocker Switch - 3 Way - #200301	1
78	D-5016	Acre Meter #750-0240 (Optional)	1
79	N27395	Drive Pin - 3/16 x 1 Lg	7
80	N24779	Spacer Ring - Drive Sprocket 7180 TPH / 7252 / 7240 / 7300	1
81	W-498	Hex Bolt - 5/8 x 1 3/4 Lg	1
82	S-748	Jam Nut - 3/8	1
83	N16853	Bushing - 1.009 ID x 1.253 OD x 1-1/4 Lg	1

A N21538 Brylite Connector - 4 Pin Male
B N21539 Brylite Connector - 4 Pin Female
K N28901 Weather Pak Connector - BLUE - 3 Pin Plug
L N28902 Weather Pak Connector - BLUE- 3 Pin Socket
O N28904 Weather Pak Connector - RED - 3 Pin Socket
P N29144 Seal Connector - RED - 3 Pin
R N28906 Weather Pak Connector - WHITE - 3 Pin Socket
S N28145 Seal Connector - WHITE - 3 Pin

See Pg.8-4 for a complete list of Replacement Connectors

NOTE "A": *Seeding Tool Trip Spacing Sprockets*

7.5" Spacing Use N27412
8" Spacing Use N27413
9" Spacing Use N27415
10" Spacing Use N27417
12" Spacing Use N27420

NOTE "B": *Metering Rate Change Sprockets*

N27412 . . . . 40A12
N27413 . . . . 40A13
N27414 . . . . 40A14
N27415 . . . . 40A15
N27416 . . . . 40A16
N27417 . . . . 40A17
N27418 . . . . 40A18
N27419 . . . . 40A19
N27420 . . . . 40A20
N27421 . . . . 40A21
N27422 . . . . 40A22
N27423 . . . .40A23
N27424 . . . . 40A24
N27425 . . . . 40A25
N27426 . . . . 40A26
N27427 . . . . 40A27
N27428 . . . . 40A28
N27429 . . . . 40A29
N27431 . . . . 40A31
N27432 . . . . 40A32
N27435 . . . . 40A35
N27438 . . . . 40A38
N27440 . . . . .40A40
N27444 . . . . .40A44
N27445 . . . . .40A45

NOTE "C": *Optional Rate Change sprockets offered through Parts Department Only*

N27430 . . . . 40A30
N27433 . . . . 40A33
N27434 . . . . 40A34
N27436 . . . . 40A36
N27443. . . . .40A43
N27437 . . . . 40A37
N27439 . . . . 40A39
N27441 . . . . 40A41
N27442 . . . . 40A42

Metering
Metering Drive - 7252

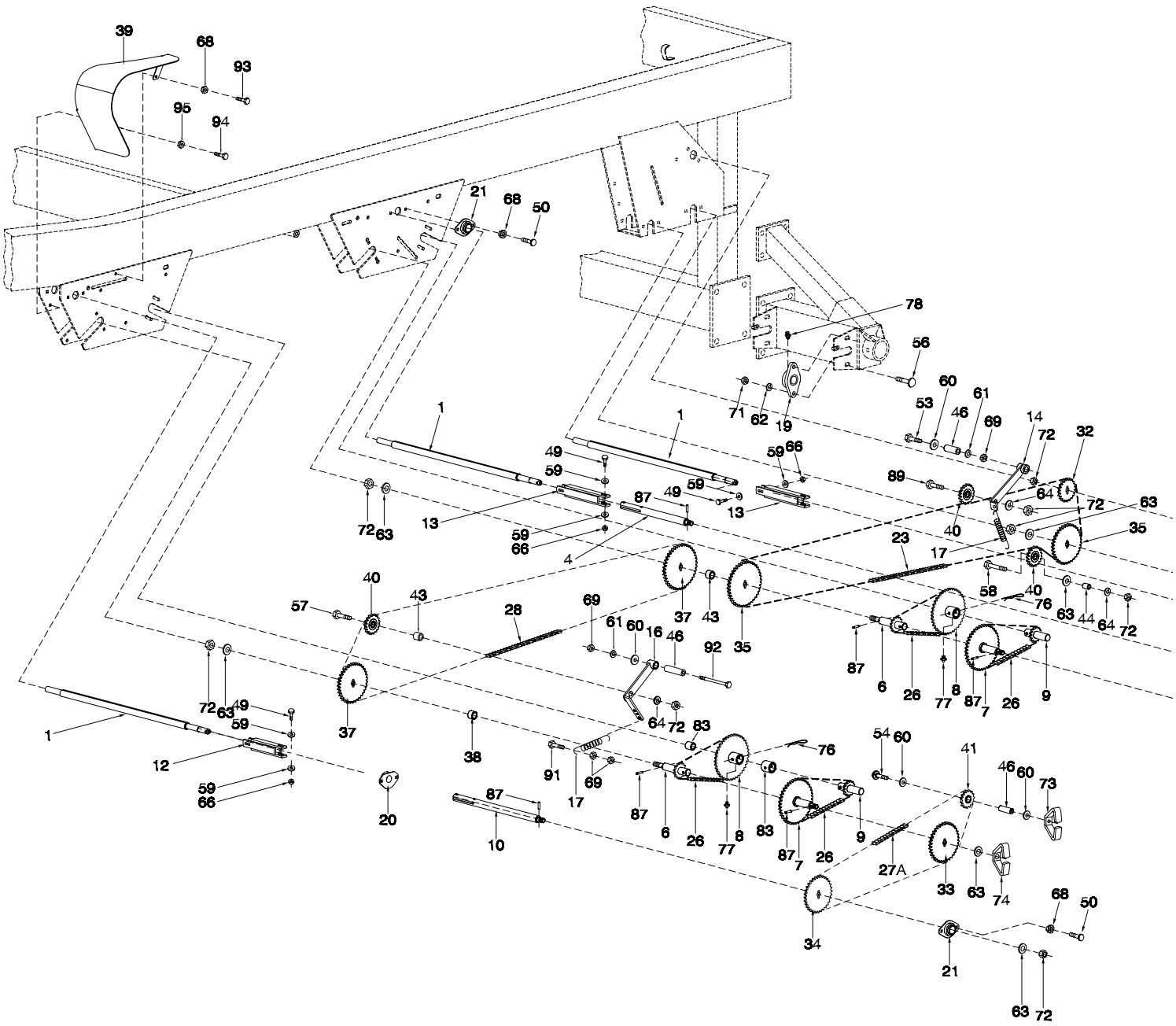

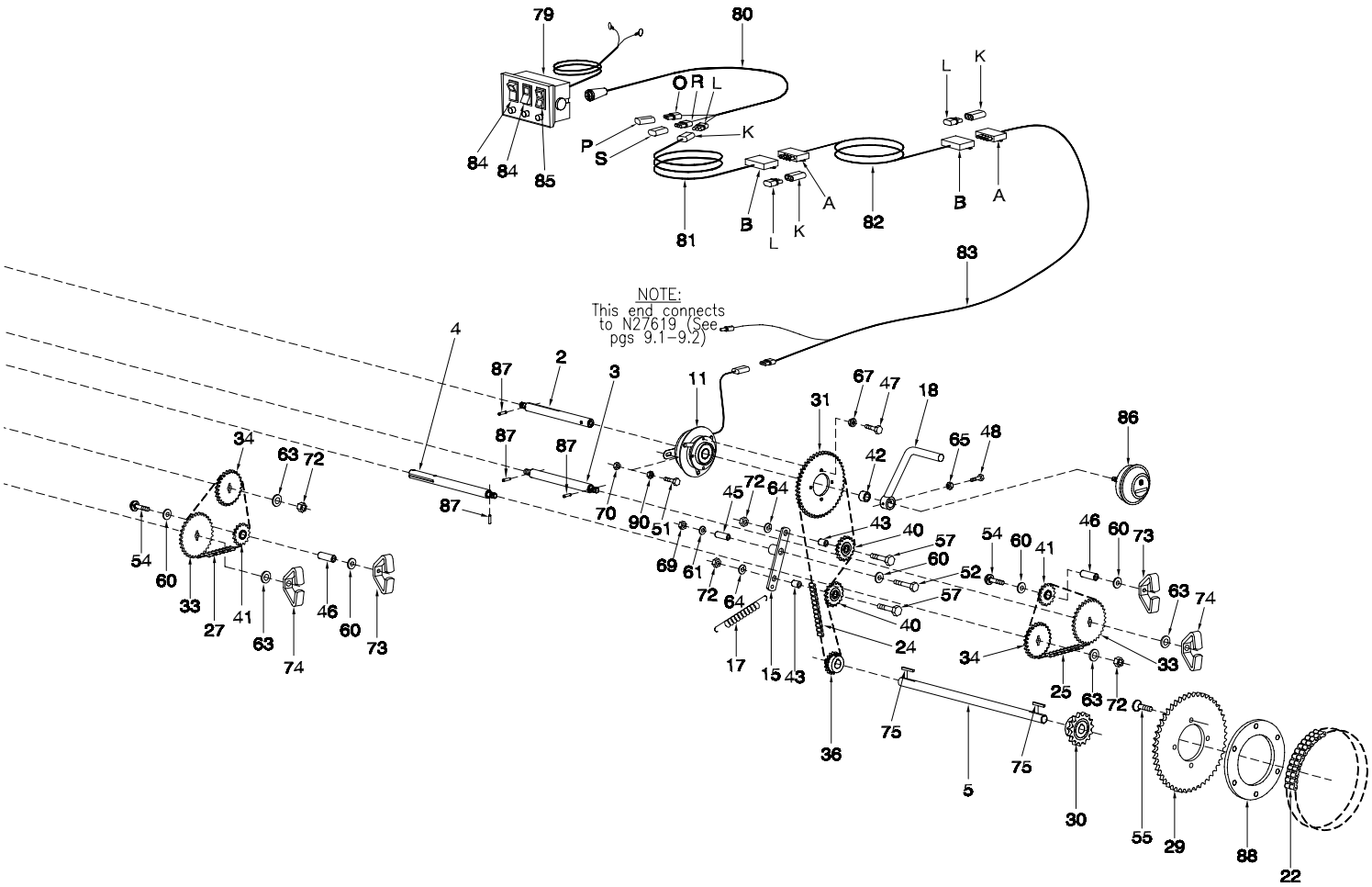
NOTE:
This end connects to N27619 (See pgs 9.1–9.2)

Metering - Metering Drive - 7252

Item	Part No.	Description	Qty
1	N19687	Metering Shaft - 8 Outlet	3
2	N27400	Shaft - Clutch - (P-Drive)	1
3	N27401	Shaft - Rate Change - (P-Drive)	1
4	N27402	Shaft - Meter End - (P-Drive)	2
5	N24782	Jackshaft - 23 3/4 Lg	1
6	N27403	Shaft - Slow Speed - 13T - (P-Drive)	2
7	N27404	Shaft - Slow Speed - 40T - (P-Drive)	2
8	N27406	Shaft - Reducer - 40T - (P-Drive)	2
9	N27405	Shaft - Reducer - 13T - (P-Drive)	2
10	N31540	Shaft - Meter End - (P-Drive)	1
11	N16862	Electric Clutch - 12 Volt	1
12	N19760	Coupler - Metering - 5 15/16 Lg	1
13	N21288	Coupler - Metering - 7 15/16 Lg	2
14	N19261	Arm - Idler	1
15	N19288	Arm - Idler	1
16	N21672	Arm - Idler	1
17	W-1663	Spring - 23/32 OD x 7 9/16 Lg	3
18	N27600	Crank - Calibration (Zinc Plated)	1
19	N19224	Bearing - 2 Bolt Flushmount	2
20	N31743	Flangette Bearing - 1" Bore - Nipped (SP)	1
21	N27411	Flangette Bearing - 1" Bore - (SP)	17
22	N19220	Chain - #60 x 48 Link w/Connector - Double Strand	1
23	N31777	Chain - #40 x 300 Link w/Connector & Offset Link	1
24	N27630	Chain - #40 x 115 Link w/Connector & Offset Link	1
25	N16903	Chain - #40 x 70 Link w/Connector	1
26	N16113	Chain - #40 x 69 Link w/Connector & Offset Link	4
27	N19258	Chain - #40 x 64 Link w/Connector	1
27A	N31776	Chain - #40 x 97 Link w/Connector	1
28	N31509	Chain - #40 x 238 Link w/Connector	1
		S10954 - Connector #40 Chain S10955 - Offset Connector #40 Chain (Not Shown)	
29	N24774	Sprocket - 60A48 - 6 Dia Bore	1
30	N19223	Sprocket - 60B15	1
31	N27410	Sprocket - 40A48 (Clutch)	1
32		See NOTE “A” see next page	
33		See NOTE “B” see next page	
34	N27425	Sprocket - 40A25 - (P-Drive)	3
35	N27426	Sprocket - 40A26 - (P-Drive) with All Weather Tires	3
	N27424	Sprocket - 40A24 - (P-Drive) with Rice Tires	2
36	N19237	Sprocket - 40B18 - (Drive)	1
37	N27424	Sprocket - 40B24 - (P-Drive)	2
38	N29200	Spacer - 7/8 OD x 1 1/8 Lg	1
39	N31682	Chain Guard - Front Tank	1
40	D17808	Idler Sprocket - 40A17 w/5/8 Bore	5
41	D-5234	Nylon Idler - 40B15	3
42	N19232	Spacer - 23/32 Lg	1
43	N19577	Bushing - 7/8 Lg	4
44	D-5011	Bushing - Spacer - 1 9/16 Lg	3
45	N16156	Spacer - 2 1/8 Lg	1
46	N19460	Bushing - 2 1/2 Lg	5
47	W-469	Hex Bolt - 1/4 x 3/4 Lg	4
48	W-1540	Hex Bolt - 1/4 x 2 Lg	1
49	N22777	Hex Bolt - 1/4 x 2 1/4 Lg - Gr8	6
50	D-5259	Carriage Bolt - 5/16 x 3/4 Lg	36
51	W-187	Hex Bolt - 3/8 x 1 1/4 Lg	1
52	W-1854	Hex Bolt - 3/8 x 3 Lg	1
53	D-5249	Hex Bolt - 3/8 x 3 1/4 Lg	1
54	N19283	Carriage Bolt - 3/8 x 3 1/2 Lg	3
55	N24780	Countersunk Machine Screw - 1/2-20 UNF x 1 3/4 Lg	4
56	H-4584	Carriage Bolt - 1/2 x 1 1/2 Lg	4
57	W-501	Hex Bolt - 5/8 x 2 1/2 Lg	3
58	W-503	Hex Bolt - 5/8 x 3 1/2 Lg	1
59	S-1198	Flatwasher - 1/4	12
60	N19706	Flatwasher - 3/8	9
61	W-523	Lockwasher - 3/8	15
62	W-525	Lockwasher - 1/2	4
63	W-793	Flatwasher - 5/8	10
64	W-526	Lockwasher - 5/8	6
65	N15757	Locknut - 1/4	1

Metering - Metering Drive - 7252

Item	Part No.	Description	Qty
66	N22778	Locknut - 1/4 w/Nylon Insert	6
67	D-5277	Serrated Locknut - 1/4	4
68	D-5278	Serrated Locknut - 5/16	37
69	W-514	Hex Nut - 3/8	5
70	M-3388	Unitorque Locknut - 3/8	1
71	W-516	Hex Nut - 1/2	4
72	W-517	Hex Nut - 5/8	11
73	N27350	Wing Nut - 3/8 (7000 Series)	3
74	N27370	Wing Nut - 5/8 (7000 Series)	3
75	S10730	Key - 1/4 x 1/4 x 1 1/4 Lg	2
76	P1318510	Hair Pin - #19 - 1/4 x 4 3/8 Lg	2
77	S-752	Grease Zerk - 1/4 Straight	4
78	F-3056	Grease Zerk - 1/4 x 90 degree	2
79	N27011	Clutch Switch - Main - 7000 Series (Fuse 7.5 amp - N30594)	1
80	N27012	Clutch Wire - Extension - 8 ft	1
81	N27013	Clutch Wire - Extension - 16 ft (Brylite)	1
	N32456	Clutch Wire - Extension - 16 ft (Weather Pak)	1
82	N16893	Wire - Clutch Extension (Brylite) Tow Behind Only	1
	N32457	Wire - Clutch Extension (Weather Pak) Tow Behind Only	1
83	N27015	Clutch Wire	1
	N32467	Clutch Wire(Weather Pak) 7240 / 7252 / 7300	1
84	N29382	Clutch Rocker Switch - 2 Way - #83301	2
85	N29383	Granular Rocker Switch - 3 Way - #200301	1
86	D-5016	Acre Meter #750-0240 (Optional)	1
87	N27395	Drive Pin - 3/16 x 1 Lg	10
88	N24779	Spacer Ring - Drive Sprocket	1
89	W-498	Hex Bolt - 5/8 x 1 3/4 Lg	1
90	S-748	Jam Nut - 3/8	1
91	W-480	Hex Bolt - 3/8 x 2 1/2	1
92	W-481	Hex Bolt - 3/8 x 3 1/2	1
93	F-1767	Hex Bolt - 5/16 x 3/4	1
94	W-867	Hex Bolt - 3/8 x 3/4	2
95	D-5279	Serrated Locknut - 3/8	2
82	S-748	Jam Nut - 3/8	1
83	N16853	Bushing - 1.009 ID x 1.253 OD x 1-1/4 Lg	1

A N21538 Brylite Connector - 4 Pin Male
B N21539 Brylite Connector - 4 Pin Female
K N28901 Weather Pak Conn - BLUE - 3 Pin Plug
L N28902 Weather Pak Conn - BLUE- 3 Pin Socket
O N28904 Weather Pak Conn - RED - 3 Pin Socket
P N29144 Seal Conn - RED - 3 Pin
R N28906 Weather Pak Conn - WHITE - 3 Pin Socket
S N28145 Seal Conn - WHITE - 3 Pin
See Pg.8-4 for a complete list of Replacement Connectors

NOTE "A": *Seeding Tool Trip Spacing Sprockets*
7.5"Spacing Use N27412
8" Spacing Use N27413
9" Spacing Use N27415
10" Spacing Use N27417
12" Spacing Use N27420

NOTE "B": *Metering Rate Change Sprockets*

N27412 . . . . 40A12	N27425 . . . . 40A25
N27413 . . . . 40A13	N27426 . . . . 40A26
N27414 . . . . 40A14	N27427 . . . . 40A27
N27415 . . . . 40A15	N27428 . . . . 40A28
N27416 . . . . 40A16	N27429 . . . . 40A29
N27417 . . . . 40A17	N27431 . . . . 40A31
N27418 . . . . 40A18	N27432 . . . . 40A32
N27419 . . . . 40A19	N27435 . . . . 40A35
N27420 . . . . 40A20	N27438 . . . . 40A38
N27421 . . . . 40A21	N27440 . . . . .40A40
N27422 . . . . 40A22	N27444 . . . . .40A44
N27423 . . . .40A23	N27445 . . . . .40A45
N27424 . . . . 40A24	

NOTE "C": *Optional Rate Change sprockets offered through Parts Department Only*

N27430 . . . . 40A30	N27437 . . . . 40A37
N27433 . . . . 40A33	N27439 . . . . 40A39
N27434 . . . . 40A34	N27441 . . . . 40A41
N27436 . . . . 40A36	N27442 . . . . 40A42
N27443 . . . . .40A43	

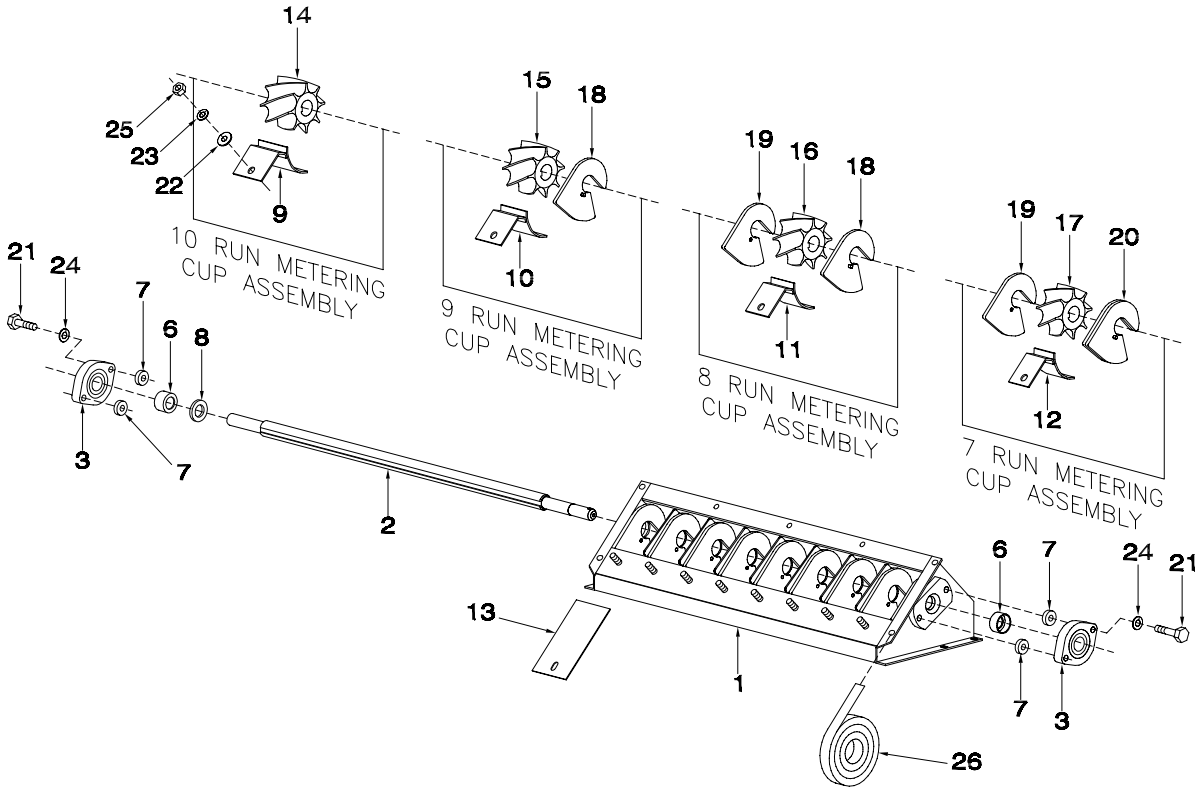

Item	Part No.	Description	Qty
1	N27100	Metering Body	1
2	N19687	Metering Shaft - 8 Outlet	1
3	N19269	Bearing Assembly - NTN - 2 Bolt Flange	2
6	N21659	Seal	2
7	N21602	Spacer	4
8	N21612	Backing Washer	1
9	N27090	Slider - #10 Wheel	As req
10	N27089	Slider - #9 Wheel	As req
11	N27088	Slider - #8 Wheel	As req
12	N27087	Slider - #7 Wheel	As req
13	N27605	Cover - Blank Off	As req
14	N42130	Wheel - #10 Metering (Cream Colored) (2.50 width)	As req
15	N42129	Wheel - #9 Metering (Cream Colored) (2.25 width)	As req
16	N42128	Wheel - #8 Metering (Cream Colored) (2.00 width)	As req
17	N42127	Wheel - #7 Metering (Cream Colored) (1.75 width)	As req
18	N27099	Spacer Plate - #9 Wheel (Single - Left)	As req
19	N27098	Spacer Plate - #8 Wheel (Single - Right)	As req
20	N27097	Spacer Plate - #7 Wheel (Double - Left)	As req
	N28492	Roll Pin - used in Spacer Plates (Not Shown)	As req
21	W-477	Hex Bolt - 3/8 x 1 1/2 Lg	4
22	D-5488	Flatwasher - 5/16	8
23	W-522	Lockwasher - 5/16	8
24	W-523	Lockwasher - 3/8	4
25	N15114	Hex Nut - 5/16 Stainless Steel	8
26	N15716	Seal Strip - 1/4 x 1 x 152 Lg (Bulk/Ft)	8 ft
	N28831	Cover Plate - Shown on Hopper Assemblies	

Metering
Coated Metering Body

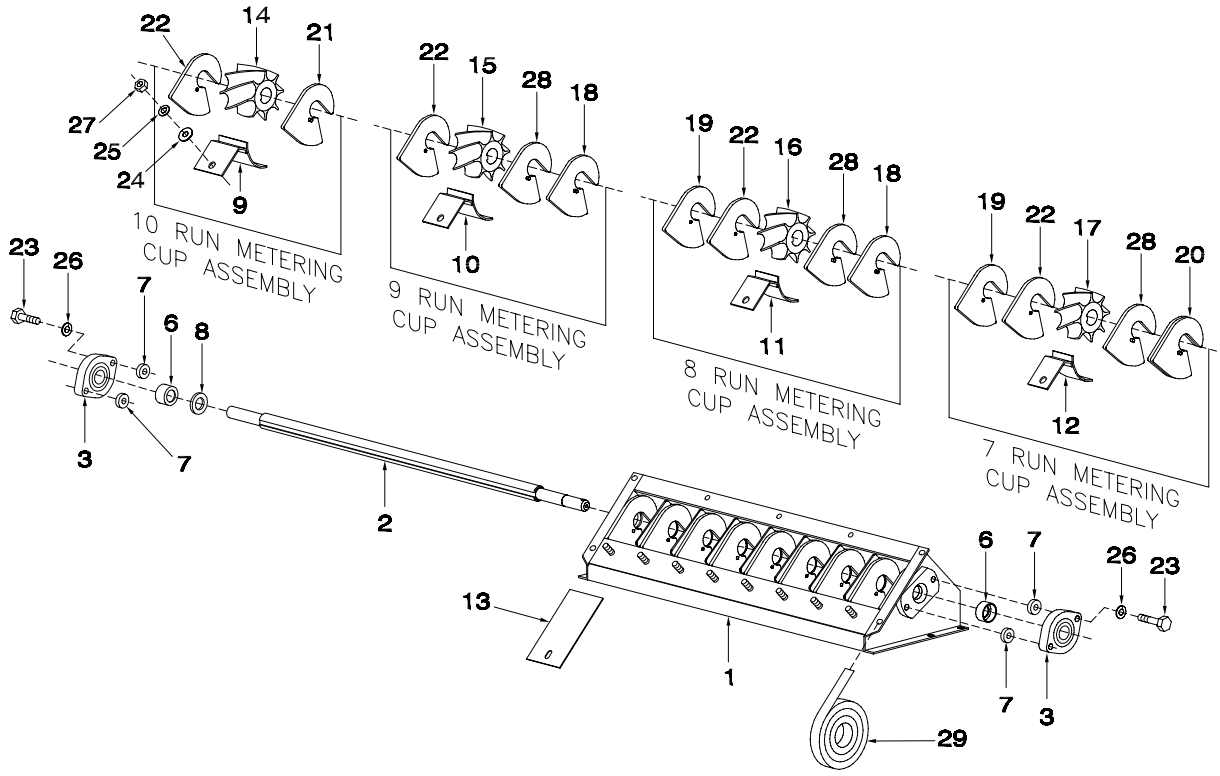

Item	Part No.	Description	Qty
1	N28928	Metering Body	1
2	N19687	Metering Shaft - 8 Outlet	1
3	N19269	Bearing Assembly - NTN - 2 Bolt Flange	2
6	N21659	Seal	2
7	N21602	Spacer	4
8	N21612	Backing Washer	1
9	N27090	Slider - #10 Wheel	As req
10	N27089	Slider - #9 Wheel	As req
11	N27088	Slider - #8 Wheel	As req
12	N27087	Slider - #7 Wheel	As req
13	N27605	Cover - Blank Off	As req
14	N42130	Wheel - #10 Metering (Cream Colored) (2.50 width)	As req
15	N42129	Wheel - #9 Metering (Cream Colored) (2.25 width)	As req
16	N42128	Wheel - #8 Metering (Cream Colored) (2.00 width)	As req
17	N42127	Wheel - #7 Metering (Cream Colored) (1.75 width)	As req
18	N27099	Spacer Plate - #9 Wheel (Single - Left)	As req
19	N27098	Spacer Plate - #8 Wheel (Single - Right)	As req
20	N27097	Spacer Plate - #7 Wheel (Double - Left)	As req
21	N28927	Plastic Spacer - Wheel (Left)	8
22	N28929	Plastic Spacer - Wheel (Right)	1
	N28492	Roll Pin - Used in Spacer Plates (Not Shown)	As req
23	W-477	Hex Bolt - 3/8 x 1 1/2 Lg	4
24	D-5488	Flatwasher - 5/16	8
25	W-522	Lockwasher - 5/16	8
26	W-523	Lockwasher - 3/8	4
27	N15114	Hex Nut - 5/16 Stainless Steel	8
28	N28924	Plastic Spacer - Wheel (Without Pin)	7
29	N15716	Seal Strip - 1/4 x 1 x 152 Lg (Bulk/Ft)	8 ft
	N29457	Kit Coated Metering Body Assy (Includes 1, 2, 3, 6, 21, 22, 28 & 29)	

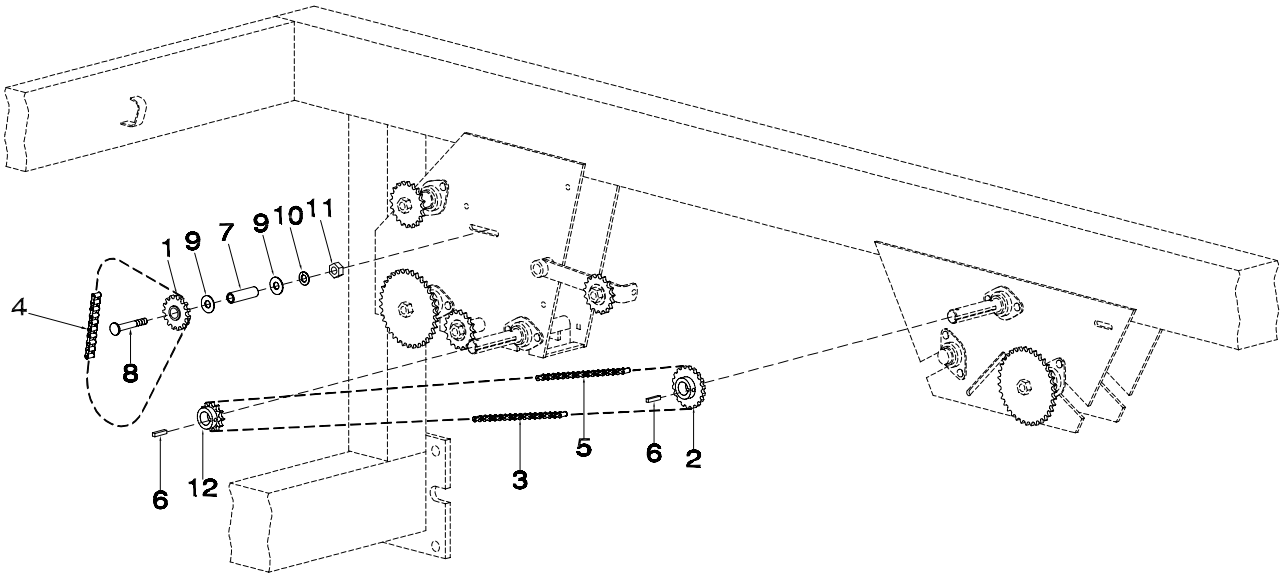

Item	Part No.	Description	Qty
1	D-5234	Nylon Idler - 40B15	1
2	N19237	Sprocket - 40B18	1
3	N27633	Chain - #40 x 47 Links w/Connector & Offset Link (7240 / 7300 ONLY)	1
4	N19774	Chain - #40 x 72 Links w/Connector	1
5	N27631	Chain - #40 x 223 Links w/Connector & Offset Link	1
6	S10730	Key - 1/4 x 1/4 x 1 1/4 Lg	2
7	N19460	Bushing - 2 1/2 Lg	1
8	N19283	Carriage Bolt - 3/8 x 3 1/2 Lg	1
9	N19706	Flatwasher - 3/8	2
10	W-523	Lockwasher- 3/8	1
11	W-514	Hex Nut - 3/8	1
12	D17946	Sprocket - 40B12	1
	N27849	Fertilizer Banding Kit (Includes Items from Options 1 & 2 pg. 2-7 & 2-8) (Order Through Wholegoods)	

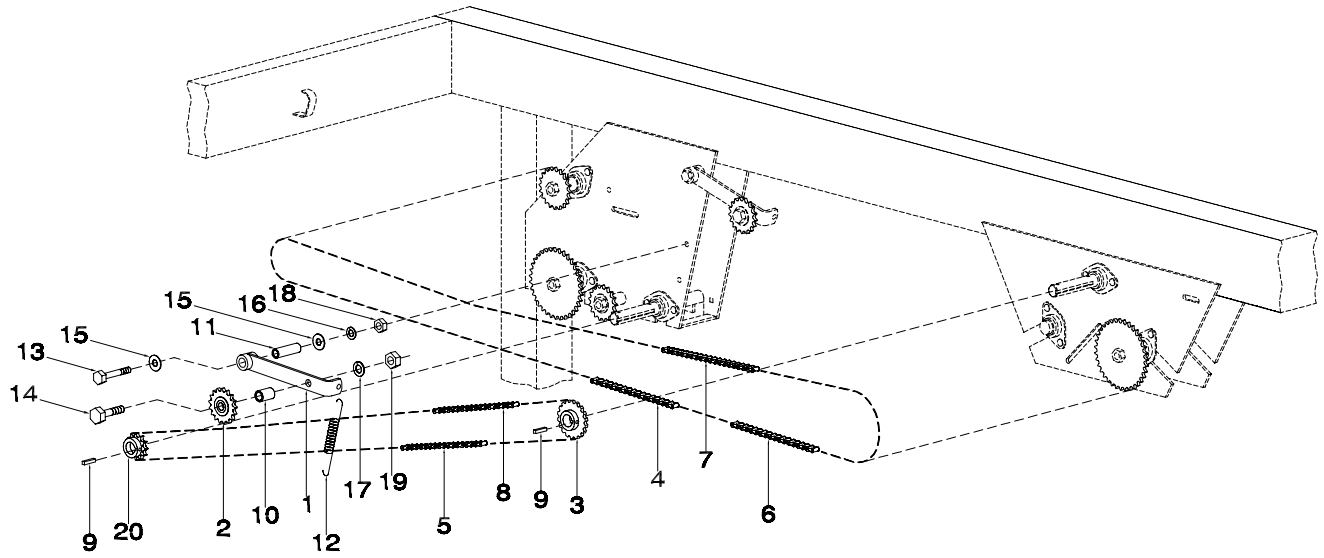

Item	Part No.	Description	Qty
1	N19261	Idler Arm	1
2	D17808	Sprocket - 40A17	1
3	N19237	Sprocket - 40B18	1
4	N27632	Chain - #40 x 40 Links w/Connector (7240 / 7300 ONLY)	1
5	N27633	Chain - #40 x 47 Links w/Connector & Offset Link (7240 / 7300 ONLY)	1
6	N19774	Chain - #40 x 72 Links w/Connector	1
7	N21024	Chain - #40 x 217 Links w/Connector & Offset Link	1
8	N27631	Chain - #40 x 223 Links w/Connector & Offset Link	1
9	S10730	Key - 1/4 x 1/4 x 1 1/4 Lg	2
10	N19577	Bushing - 7/8 Lg	1
11	N19460	Bushing - 2 1/2 Lg	1
12	W-1663	Spring - 23/32 OD x 7 9/16 Lg	1
13	D-5249	Hex Bolt - 3/8 x 3 1/4 Lg	1
14	W-501	Hex Bolt - 5/8 x 2 1/2 Lg	1
15	N19706	Flatwasher - 3/8	2
16	W-523	Lockwasher - 3/8	1
17	W-526	Lockwasher - 5/8	1
18	W-514	Hex Nut - 3/8	1
19	W-517	Hex Nut - 3/8	1
20	D17946	Sprocket - 40B12	1
	N27849	Fertilizer Banding Kit (Includes Items from Options 1 & 2 pg. 2-7 & 2-8) (Order Through Wholegoods)	

8900/9000
MAXIM AIR DRILL FRONT MOUNT

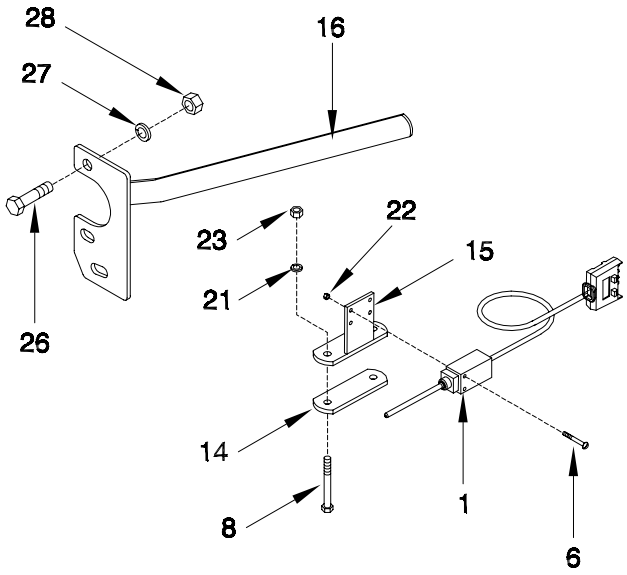

MAGNUM III

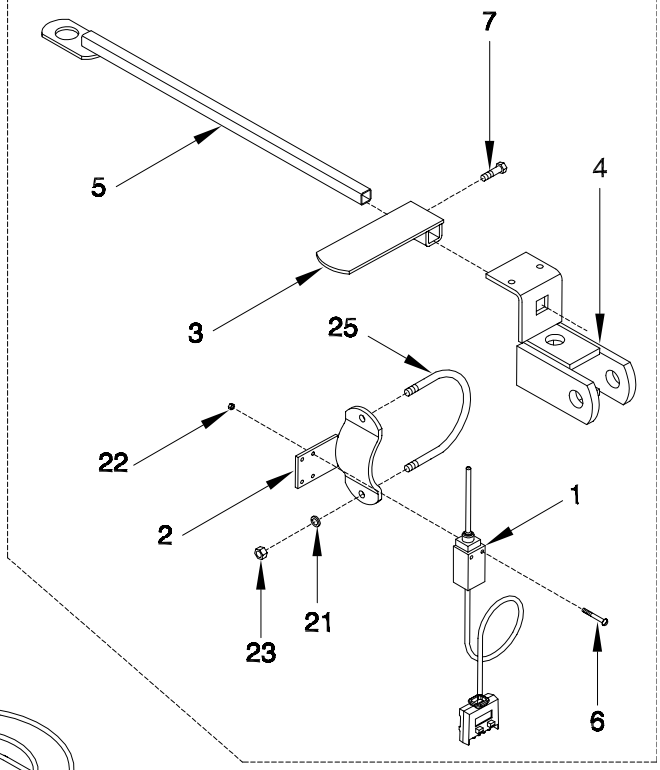

CONCEPT 2000

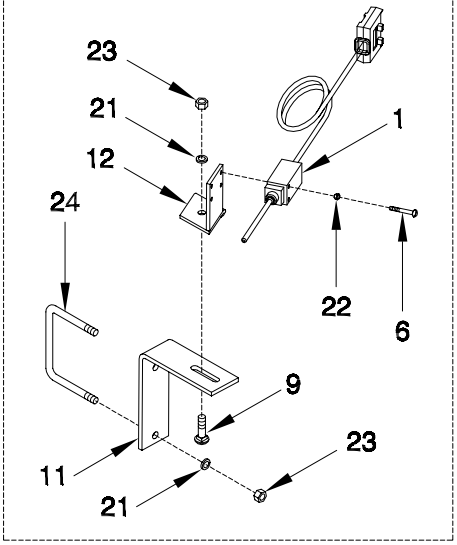

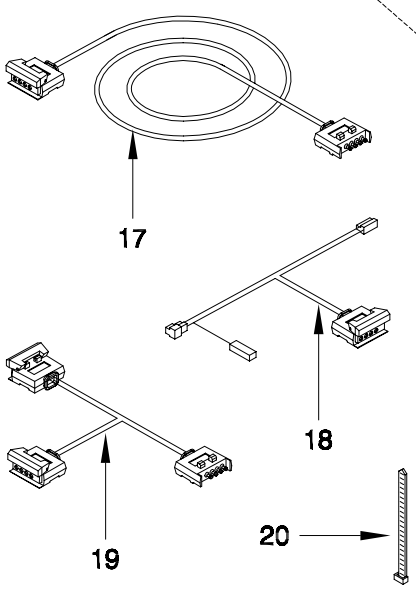

Metering - Optional Remote Clutch Switch - Brylite Ends

Item	Part No.	Description	Qty
		MAGNUM III - Order Kits Through Wholegoods ONLY	
1	N32068	Work Switch & Wire	1
2	N32104	Switch Bracket - Magnum III	1
3	N32110	Activator Arm - Magnum III	1
4	C29572	Left Knuckle Joint - Magnum III 43 ft and 50 ft ONLY	1
5	C29579	Depth Stop Rod - Magnum III 43 ft and 50 ft ONLY	1
6	N32101	Stove Bolt - 3/16 x 1 1/2 Lg	2
7	W-867	Bolt - 3/8 x 3/4 Lg	1
17	N16893	Wire - Clutch Extension (Main) - 37 1/2 ft	1
18	N32060	Connector - 'Y' Wire Tow Between ONLY	1
19	N32061	Connector - 'Y' Wire Tow Behind ONLY	1
20	S13336	Tie Strap	6
21	W-523	Lock Washer - 3/8	2
22	N32102	Nut - 3/16	2
23	W-514	Nut - 3/8	2
25	C31374	U-Bolt - 3/8 x 4 1/2 x 12 1/2	1
	N30948	Kit Work Switch Mag III 25, 31 & 40 - Tow Between (Includes Above Items except 4, 5 &19)	
	N30949	Kit Work Switch Mag III 25, 31 & 40 - Tow Behind (Includes Above Items except 4, 5 &18)	
	N30951	Kit Work Switch Mag III 43 & 50 - Tow Between (Includes Above Items except 19)	
	N30950	Kit Work Switch Mag III 43 & 50 - Tow Behind (Includes Above Items except 18)	
		CONCEPT 2000 - Order Kits Through Wholegoods ONLY	
1	N32068	Work Switch & Wire	1
6	N32101	Stove Bolt - 3/16 x 1 1/2 Lg	2
9	P7C616	Carriage Bolt - 3/8 x 1 Lg	1
11	N32062	Mounting Bracket Angle	1
12	N32065	Switch Bracket - Work Switch	1
17	N16893	Wire - Clutch Extension (Main) - 37 1/2 ft Tow Between ONLY	1
18	N32060	Connector - 'Y' Wire Tow Between ONLY	1
19	N32061	Connector - 'Y' Wire Tow Behind ONLY	1
20	S13336	Tie Strap	2
21	W-523	Lock Washer - 3/8	3
22	N32102	Nut - 3/16	2
23	W-514	Nut - 3/8	3
24	N15098	U-Bolt - 3/8 x 4 x 5	1
	N30958	Kit Work Switch Concept - Tow Between (Includes Above Items except 19)	
	N30957	Kit Work Switch Concept - Tow Behind (Includes Above Items except 17 &18)	
		8900/9000 & MAXIM AIR DRILL FRONT MOUNT - Order Kits Through Wholegoods ONLY	
1	N32068	Work Switch & Wire	1
6	N32101	Stove Bolt - 3/16 x 1 1/2 Lg	2
8	C-1550	Bolt - 3/8 x 4 Lg	2
14	N32106	Mounting Plate	1
15	N32105	Switch Bracket - 8900/9000	1
16	N32107	Activator Arm - 8900/9000	1
17	N16893	Wire - Clutch Extension (Main) - 37 1/2 ft	1
18	N32060	Connector - 'Y' Wire Tow Between ONLY	1
19	N32061	Connector - 'Y' Wire Tow Behind ONLY	1
20	S13336	Tie Strap	6
21	W-523	Lock Washer - 3/8	2
22	N32102	Nut - 3/16	2
23	W-514	Nut - 3/8	2
26	W-497	Hex Bolt - 5/8 x 1 1/2 25 - 31 and 31 - 41 ONLY	2
27	W-526	Lock Washer - 5/8 25 - 31 and 31 - 41 ONLY	2
28	W-517	Nut - 5/8 25 - 31 and 31 - 41 ONLY	2
	N30952	Kit Work Switch 8900/9000 - Tow Between (Includes Above Items except 19)	
	N30953	Kit Work Switch 8900/9000 - Tow Behind (Includes Above Items except 18)	

8900/9000
MAXIM AIR DRILL FRONT MOUNT

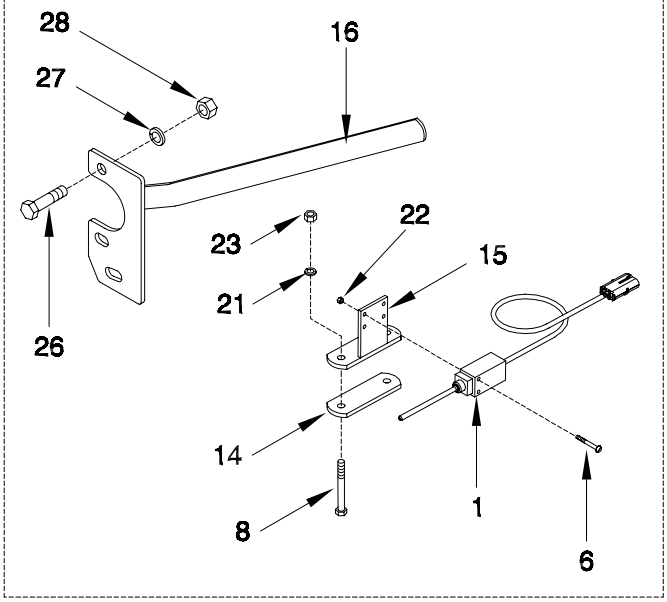

MAGNUM III

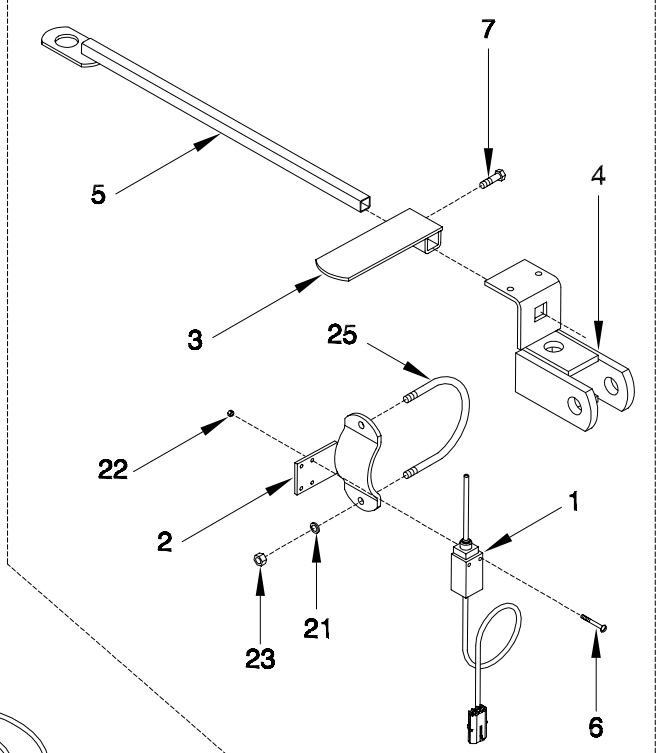

CONCEPT 2000

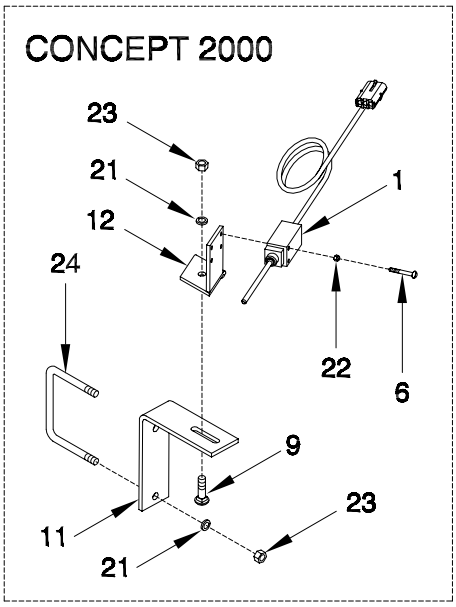

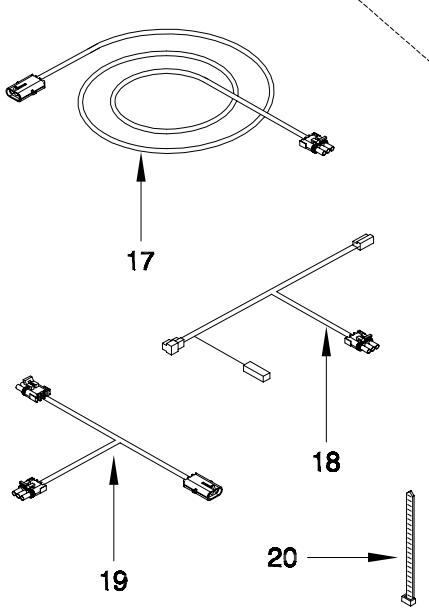

NEVER PIN

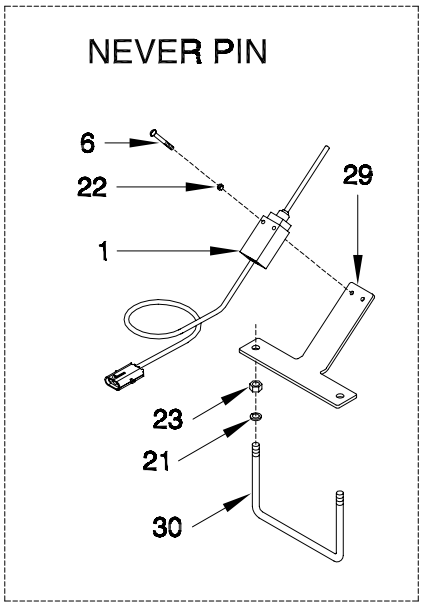

Metering - Optional Remote Clutch Switch - Weather Pak Ends

Item	Part No.	Description	Qty
		MAGNUM III - Order Kits Through Wholegoods ONLY	
1	N32481	Work Switch & Wire - Weather Pak End	1
2	N32104	Switch Bracket - Magnum III	1
3	N32110	Activator Arm - Magnum III	1
4	C29572	Left Knuckle Joint - Magnum III 43 and 50 ONLY	1
5	C29579	Depth Stop Rod - Magnum III 43 and 50 ONLY	1
6	N32101	Stove Bolt - 3/16 x 1 1/2 Lg	2
7	W-867	Bolt - 3/8 x 3/4 Lg	1
17	N32457	Wire - Clutch Extension (Main) - 37 1/2 ft - Weather Pak Ends	1
18	N32483	Connector - 'Y' Wire Tow Between ONLY - Weather Pak Ends	1
19	N32482	Connector - 'Y' Wire Tow Behind ONLY - Weather Pak Ends	1
20	S13336	Tie Strap	6
21	W-523	Lock Washer - 3/8	2
22	N32102	Nut - 3/16	2
23	W-514	Nut - 3/8	2
25	C31374	U-Bolt - 3/8 x 4 1/2 x 12 1/2	1
	N32781	Kit Work Switch Mag III 25, 31 & 40 - Tow Between (Includes Above Items except 4, 5 &19)	
	N32786	Kit Work Switch Mag III 25, 31 & 40 - Tow Behind (Includes Above Items except 4, 5 &18)	
	N32776	Kit Work Switch Mag III 43 & 50 - Tow Between (Includes Above Items except 19)	
	N32785	Kit Work Switch Mag III 43 & 50 - Tow Behind (Includes Above Items except 18)	
		CONCEPT 2000 - Order Kits Through Wholegoods ONLY	
1	N32481	Work Switch & Wire - Weather Pak End	1
6	N32101	Stove Bolt - 3/16 x 1 1/2 Lg	2
9	P7C616	Carriage Bolt - 3/8 x 1 Lg	1
11	N32062	Mounting Bracket Angle	1
12	N40472	Switch Bracket - Work Switch	1
17	N32457	Wire - Clutch Extension (Main) - 37 1/2 ft - Weather Pak Ends	1
18	N32483	Connector - 'Y' Wire Tow Between ONLY - Weather Pak Ends	1
19	N32482	Connector - 'Y' Wire Tow Behind ONLY - Weather Pak Ends	1
20	S13336	Tie Strap	2
21	W-523	Lock Washer - 3/8	3
22	N32102	Nut - 3/16	2
23	W-514	Nut - 3/8	3
24	N15098	U-Bolt - 3/8 x 4 x 5	1
	N32772	Kit Work Switch Concept - Tow Between (Includes Above Items except 19)	
	N32782	Kit Work Switch Concept - Tow Behind (Includes Above Items except 17 &18)	
		8900/9000 & MAXIM AIR DRILL FRONT MOUNT - Order Kits Through Wholegoods ONLY	
1	N32481	Work Switch & Wire - Weather Pak End	1
6	N32101	Stove Bolt - 3/16 x 1 1/2 Lg	2
8	C-1550	Bolt - 3/8 x 4 Lg	2
14	N32106	Mounting Plate	1
15	N32105	Switch Bracket - 8900/9000	1
16	N32107	Activator Arm - 8900/9000	1
17	N32457	Wire - Clutch Extension (Main) - 37 1/2 ft - Weather Pak Ends	1
18	N32483	Connector - 'Y' Wire Tow Between ONLY - Weather Pak Ends	1
19	N32482	Connector - 'Y' Wire Tow Behind ONLY - Weather Pak Ends	1
20	S13336	Tie Strap	6
21	W-523	Lock Washer - 3/8	2
22	N32102	Nut - 3/16	2
23	W-514	Nut - 3/8	2
26	W-497	Hex Bolt - 5/8 x 1 1/2 25 - 31 and 31 - 41 ONLY	2
27	W-526	Lock Washer - 5/8 25 - 31 and 31 - 41 ONLY	2
28	W-517	Nut - 5/8 25 - 31 and 31 - 41 ONLY	2
	N32775	Kit Work Switch 8900/9000 - Tow Between (Includes Above Items except 19)	
	N32774	Kit Work Switch 8900/9000 - Tow Behind (Includes Above Items except 18)	
		Never Pin - Order Kits Through Wholegoods ONLY	
1	N32481	Work Switch & Wire - Weather Pak End	1
6	N32101	Stove Bolt - 3/16 x 1 1/2 Lg	2
17	N32457	Wire - Clutch Extension (Main) - 37 1/2 ft - Weather Pak Ends	1
18	N32483	Connector - 'Y' Wire Tow Between ONLY - Weather Pak Ends	1
19	N32482	Connector - 'Y' Wire Tow Behind ONLY - Weather Pak Ends	1
20	S13336	Tie Strap	6
21	W-523	Lock Washer - 3/8	2
22	N32102	Nut - 3/16	2
23	W-514	Nut - 3/8	2
29	N34731	Bracket - Work Switch - Never Pin	1
30	H10592	U-Bolt - 3/8 x 6 x 5	1
	N35620	Kit Work Switch Never Pin - Tow Between (Includes Above Items except 19)	
	N35619	Kit Work Switch Never Pin - Tow Behind (Includes Above Items except 18)	

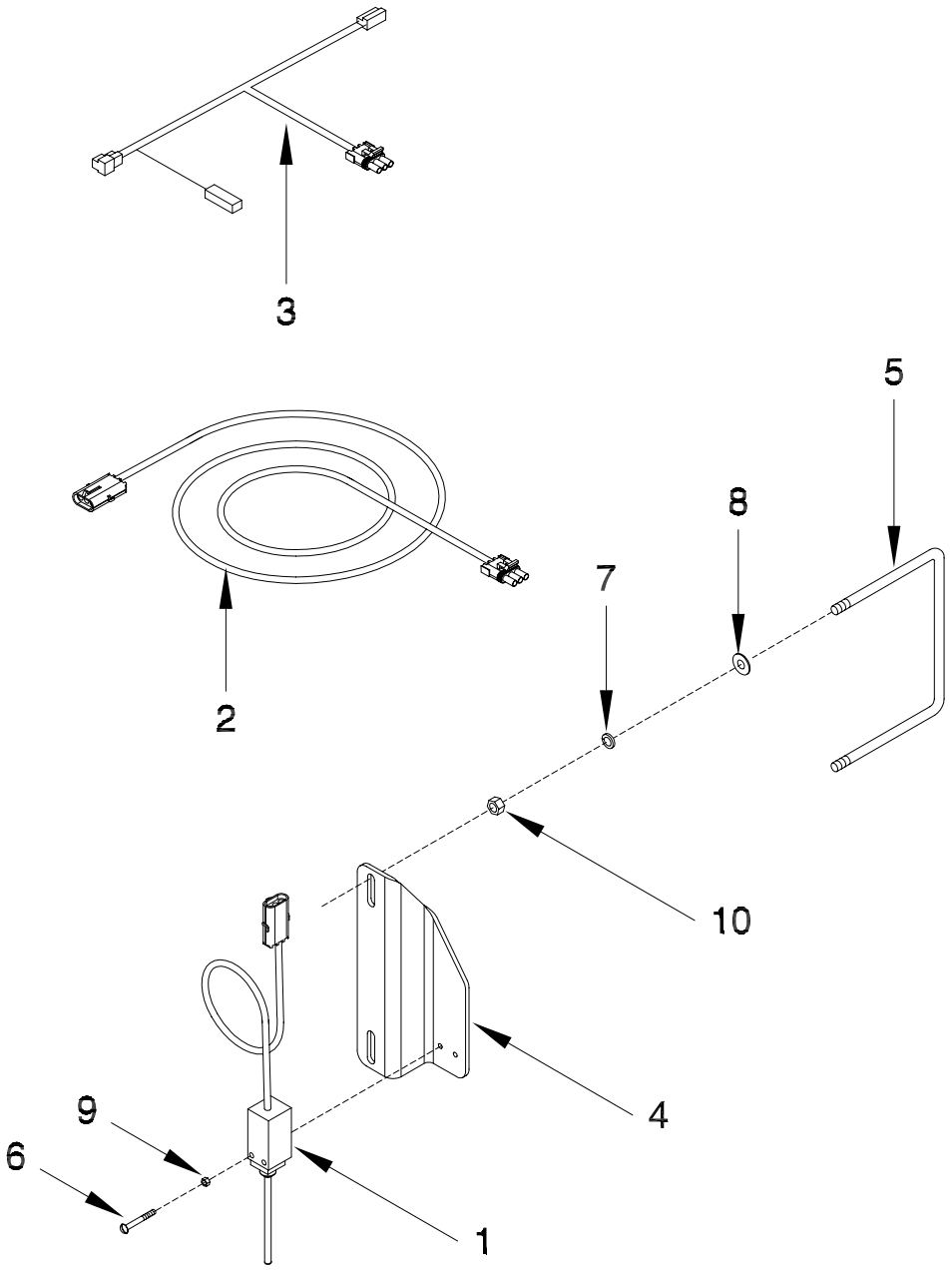

Item	Part No.	Description	Qty
1	N32481	Work Switch & Wire - Aircart	1
2	N32457	Wire Clutch Extension (Main) 37 1/2 ft	1
3	N32483	Connector 'Y' Wire Tow Between	1
4	N34359	Bracket - Switch	1
5	N31209	U-Bolt 3/8 x 7 1/16 x 8	1
6	N32101	Stove Bolt Plated 3/16 x 1 1/2	2
7	W-523	Lockwasher - 3/8	2
8	W-538	Flatwasher - 3/8	2
9	N32102	Hex Nut - 3/16	2
10	W-514	Hex Nut - 3/8	2

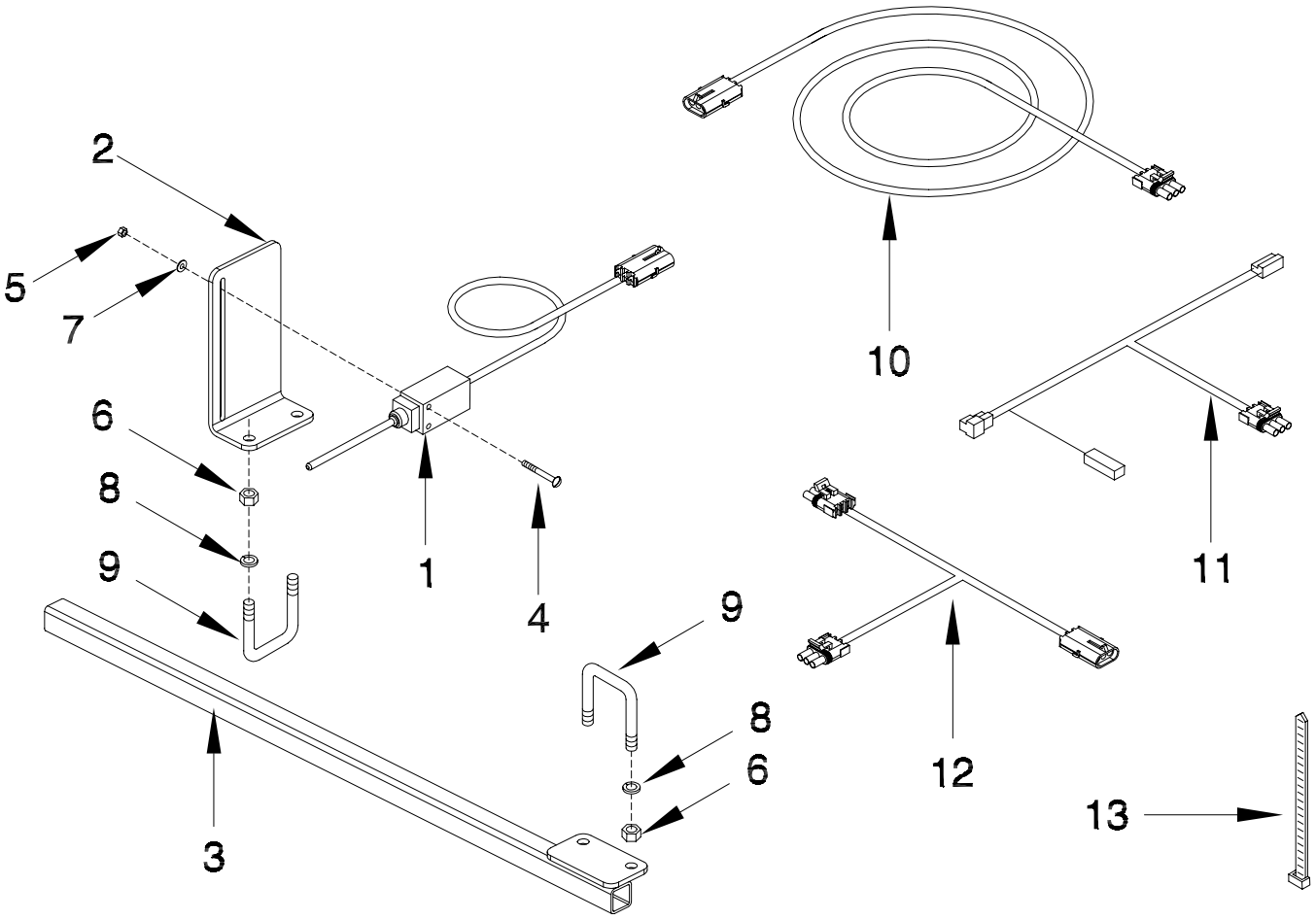

Item	Part No.	Description	Qty
1	N32481	Work Switch & Wire - Weather Pak End	1
2	S39949	Bracket Mount - Work Switch - Maxim III	1
3	S39948	Bracket Actuator - Work Switch - Maxim III	1
4	N32101	Stove Bolt - 3/16 x 1 1/2 Lg	2
5	N32102	Nut - 3/16	2
6	W-514	Hex Bolt - 3/8	4
7	S39549	Flatwasher - 3/16	2
8	W-523	Lockwasher - 3/8	4
9	N15097	U-Bolt - 3/8 x 2 x 5	2
10	N32457	Wire - Clutch Extension (Main) - 37 1/2 ft - Weather Pak Ends	1
11	N32483	Connector - 'Y' Wire - Tow Between ONLY - Weather Pak Ends	1
12	N32482	Connector - 'Y' Wire - Tow Behind ONLY - Weather Pak Ends	1
13	S13336	Tie Strap	6
		Order Kits through Wholegoods Only	
	N41221	Kit Work Switch Maxim III - Tow Between (Includes Above Items except 12)	
	N41220	Kit Work Switch Maxim III - Tow Behind (Includes Above Items except 11)	

Metering
Optional Clutch

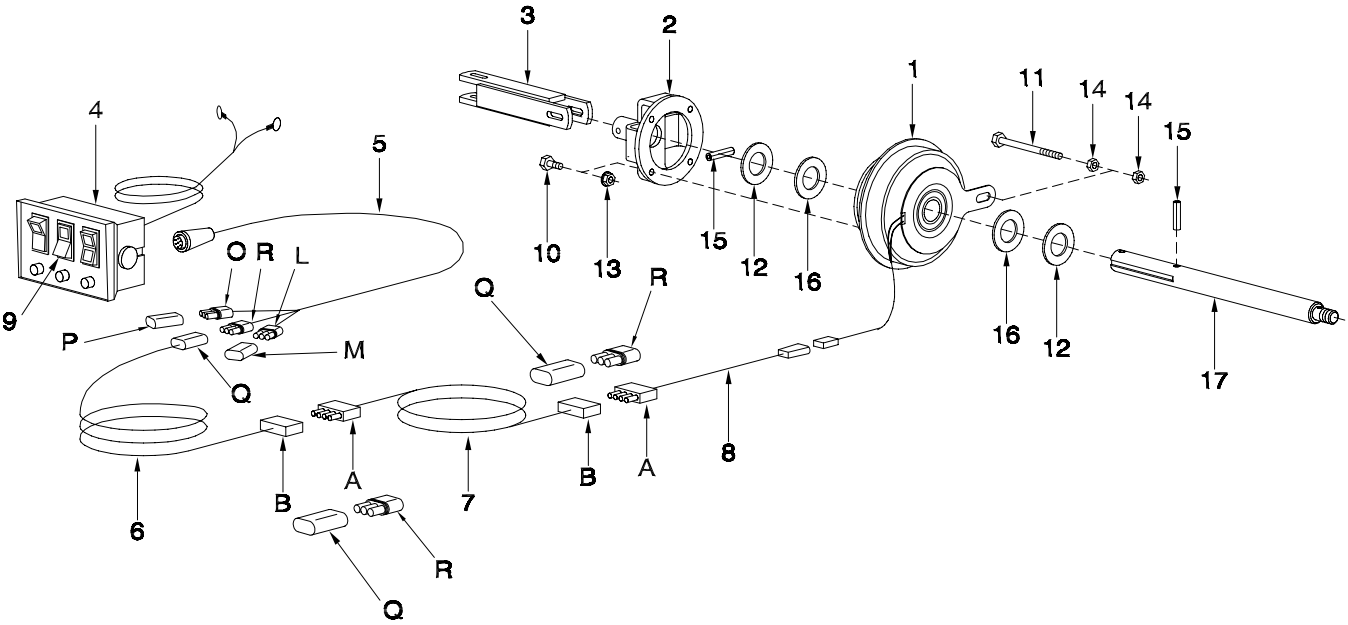

Item	Part No.	Description	Qty
1	N16862	Electric Clutch - 12 Volt	1
2	N19470	Coupler - Fertilizer Clutch	1
3	N21287	Coupler - Metering - 5 5/8 Lg	1
4	N27011	Clutch Switch - Main - 7000 Series (Fuse 7.5 amp - N30594)	1
5	N27012	Clutch Wire - Extension - 8 ft	1
6	N28039	Wire - Clutch Extension (Aux) - 16 ft (Brylite)	1
	N32458	Wire - Clutch Extension (Aux) - 16 ft (Weather Pak)	1
7	N28079	Wire - Clutch Extension (Aux) - 37 1/2 ft (Brylite)	1
	N32460	Wire - Clutch Extension (Aux) - 37 1/2 ft (Weather Pak)	1
8	N28099	Clutch Wire (Aux)(Brylite)	1
	N32459	Clutch Wire (Aux)(Weather Pak)	1
	N24583	Clutch Wire (Bulk/Ft)	
9	N29382	Clutch Rocker Switch - 2 Way - #83301	1
10	W-469	Hex Bolt - 1/4 x 3/4 Lg	4
11	C-1550	Hex Bolt - 3/8 x 4 Lg	1
12	H18268	Flatwasher - 1	2
13	D-5277	Serrated Locknut - 1/4	4
14	W-514	Hex Nut - 3/8	2
15	S-4781	Spiral Pin - 1/4 x 1 1/2 Lg	2
16	N31040	Washer - 1 3/4 OD x 16 Ga Thick (As Req'd)	2
17	N27402	Shaft - Meter End - (P-Drive) required for auxilary clutch kit	1
		Order Kits Through Wholegoods	
	N27847	Tow Behind Clutch Kit - Brylite (Includes All Above Items Except 4 & 5) All Models **Except 7252**	
	N32780	Tow Behind Clutch Kit - Weather Pak (Includes All Above Items Except 4 & 5) All Models **Except 7252**	
	N27848	Tow Between Clutch Kit - Brylite (Includes All Above Items Except 4, 5 & 7) All Models **Except 7252**	
	N32779	Tow Between Clutch Kit - Weather Pak (Includes All Above Items Except 4, 5 & 7) All **Except 7252**	
	N31495	Tow Behind Clutch Kit - Brylite (Includes All Above Items Except 4 & 5) 7252 **Only**	
	N32778	Tow Behind Clutch Kit - Weather Pak (Includes All Above Items Except 4 & 5) 7252 **Only**	
	N31496	Tow Between Clutch Kit - Brylite (Includes All Above Items Except 4, 5 & 7) 7252 **Only**	
	N32777	Tow Between Clutch Kit - Weather Pak (Includes All Above Items Except 4, 5 & 7) 7252 **Only**	
		See Pg 8-4 for a complete list of Replacement Connectors	
A	N21538	Brylite Connector - 4 Pin Male	
B	N21539	Brylite Connector - 4 Pin Female	
L	N28902	Weather Pak Connector - 3 Pin Socket - Blue	
O	N28904	Weather Pak Connector - 3 Pin Socket - Red	
P	N29144	Weather Pak Connector - 3 Pin Seal Plug - Red	
Q	N28905	Weather Pak Connector - 3 Pin Plug - White	
R	N28906	Weather Pak Connector - 3 Pin Socket - White	

Section 3:
Wheel & Hub

Section Contents

7130 / 7180 Rear Wheels 3-2
7130 / 7180 Front Castor Fork 3-3
7240 / 7252 / 7300 Front Castor Fork 3-3
7180 TPH / 7240 / 7252 / 7300 Rear Wheels 3-4

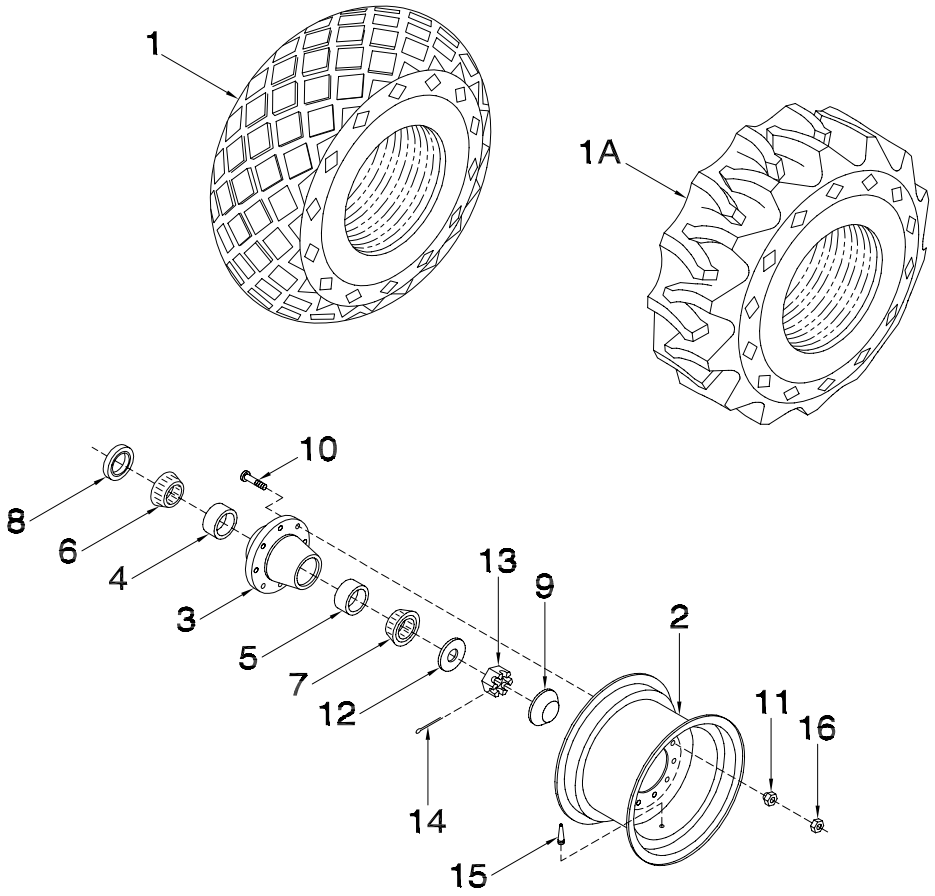

Item	Part No.	Description	Qty
		7130 / 7180 Rear Wheels	
1	N29276	Tire - 16.5L x 16.1 (6 Ply Rating) (STII) 7130	1
1A	N29278	Tire (Lug) - 16.5L x 16.1 (6 Ply Rating) (SGTR) (Optional 7130)	1
1	N19708	Tire - 21.5L x 16.1 (6 Ply Rating) (STII) 7180	1
1A	N29294	Tire (Lug) - 21.5L x 16.1 (8 Ply Rating) (SGTR) (Optional 7180)	1
1	N28925	Tire (AWT) - 18.4 x 26 (10 Ply Rating) 7180 Optional	1
2	N16025	Rim - W14C x 16.1 7130	1
	N19709	Rim - W18C x 16.1 7180 for 21.5 x 16.1 Tire	1
	N28926	Rim - DW16 x 26 7180 for 18.4 x 26 Tire	1
3	N19174	Hub Drive Wheel (Includes Items 4, 5 & 10)	1
	N19173	Hub Non-Drive Wheel (Includes Items 4, 5 & 10)	1
4	N19167	Inner Cup -382 A	1
5	N19168	Outer Cup - LM501310	1
6	N19169	Inner Bearing Cone - 387 AS	1
7	N19170	Outer Bearing Cone - LM501349	1
8	N19172	Shaft Seal - 2 1/2 (C/R #25108)	1
9	N19171	Dust Cap	1
10	N19727	Press-In Bolt - 5/8-18 UNF x 2 1/2 Lg	8
11	N19586	Tapered Wheel Nut - 5/8-18 UNF	8
12	D-5499	Flatwasher - 1 5/16 ID x 2 3/4 OD	1
13	N19484	Slotted Hex Nut - 1 1/4-12 UNF	1
14	D-5239	Cotter Pin - 1/4 x 2 1/4	1
15	W-3328	Valve Stem Assembly 7130 / 7180 Tow Behind	1
	N13968	Valve Stem Assembly 7180 Tow Between	1

Wheel & Hub - Rear & Front Wheels

Item	Part No.	Description	Qty
		7130 / 7180 Front Castor Fork	
1	N29276	Tire - 16.5L x 16.1 (6 Ply Rating) (STII) 7130	1
1A	N29278	Tire (Lug) - 16.5L x 16.1 (6 Ply Rating) (SGTR) (Optional 7130)	1
1	N19708	Tire - 21.5L x 16.1 (6 Ply Rating) (STII) 7180 Tow Behind	1
1A	N29294	Tire (Lug) - 21.5L x 16.1 (8 Ply Rating) (SGTR) (Optional 7180)	1
2	N16025	Rim - W14C x 16.1 7130	1
	N19709	Rim - W18C x 16.1 7180	1
		Axle and Bearings are shown in Section 1 page 8	
11	N19586	Tapered Wheel Nut - 5/8-18 UNF	8
15	W-3328	Valve Stem Assembly	1
16	C-708	Hex Nut - 5/8-18 UNF	8
		7240 / 7252 / 7300 Front Castor Fork	
1	N19708	Tire - 21.5L x 16.1 (6 Ply Rating) (STII) 7240 / 7252	1
1A	N29294	Tire (Lug) - 21.5L x 16.1 (8 Ply Rating) (SGTR) (Optional 7240 / 7252)	1
1	N25616	Tire - 21.5L x 16.1 (10 Ply Rating) (STII) 7300	1
1A	N29298	Tire (Rice) - 21.5L x 16.1 (12 Ply Rating) (SGTR) (Optional 7300)	1
2	N19709	Rim - W18C x 16.1	1
3A	N19173	Hub Non-Drive Wheel (Includes Items 4, 5 & 10)	1
4	N19167	Inner Cup -382 A	1
5	N19168	Outer Cup - LM501310	1
6	N19169	Inner Bearing Cone - 387 AS	1
7	N19170	Outer Bearing Cone - LM501349	1
8	N19172	Shaft Seal - 2 1/2 (C/R #25108)	1
9	N19171	Dust Cap	1
10	N19727	Press-In Bolt - 5/8-18 UNF x 2 1/2	8
11	N19586	Tapered Wheel Nut - 5/8-18 UNF	8
12	D-5499	Flatwasher - 1 5/16 ID x 2 3/4 OD	1
13	N19484	Slotted Hex Nut - 1 1/4-12 UNF	1
14	D-5239	Cotter Pin - 1/4 x 2 1/4	1
15	W-3328	Valve Stem Assembly	1

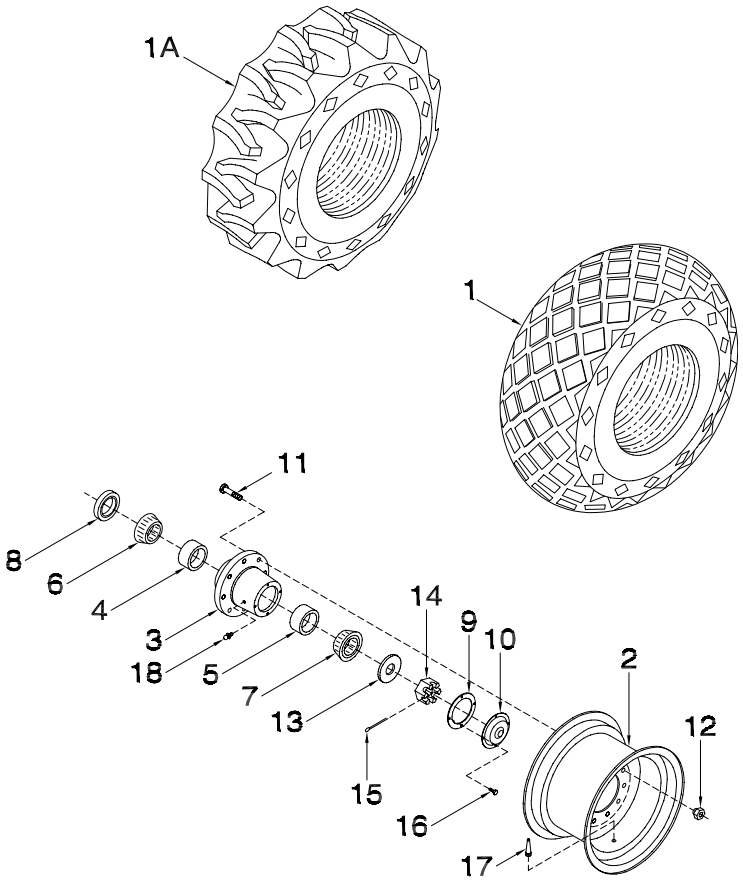

Item	Part No.	Description	Qty
		7180 TPH / 7240 / 7252 / 7300 Rear Wheels	
1	N13963	Tire (AWT) - 23.1 x 26 (8 Ply Rating) 7240 / 7252	1
	N25617	Tire (AWT) - 23.1 x 26 (12 Ply Rating) 7300 / 7240 Three Point Hitch	1
	N25617	Tire (AWT) - 23.1 x 26 (12 Ply Rating) (Optional 7180 Three Point Hitch)	1
1A	N25755	Tire (Rice) - 23.1 x 26 (10 Ply Rating) (Optional 7240 / 7252 / 7300)	1
2	N13964	Rim - DW20 x 26	1
3	N13950	Hub - Non-Drive Wheel (Includes Items 4, 5 & 11)	1
3A	N25479	Hub - Drive Wheel (Includes Items 4, 5 & 11)	1
4	N13951	Bearing Cup	1
5	N13952	Bearing Cup	1
6	N13954	Inner Bearing Cone	1
7	N13955	Outer Bearing Cone	1
8	N13956	Seal	1
9	N13959	Gasket	1
10	N13957	Dust Cap	1
11	N13953	Wheel Stud Bolt	10
12	N13958	Wheel Nut - 3/4 UNF Flanged	10
13	N13962	Flatwasher	1
14	N19484	Castle Nut - 1 1/4-12 UNF	1
15	D-5239	Cotter Pin - 1/4 x 2 1/4	1
16	D-5247	Hex Bolt - 5/16 x 1/2	4
17	N13968	Valve Stem	1
18	S-752	Grease Nipple	1

Section 4: Distribution

Section Contents

Single Shoot Tow Behind 4-2
Single Shoot Tow Behind 7252 4-4
Single Shoot Tow Between 4-6
Single Shoot Tow Between 7252 4-8
Single Shoot Tow Between Xpress 4-10
Dual Shoot Tow Behind 4-12
Dual Shoot Tow Behind 7252 4-15
Dual Shoot Tow Between 4-18
Dual Shoot Tow Between 7252 4-21
Broadcast 7252 Front Tank Tow Between - 4 & 5 Primaries 4-24
Broadcast 7252 Front Tank Tow Between - 6 & 8 Primaries 4-27
Broadcast 7252 Front Tank Tow Behind - 4 & 5 Primaries 4-30
Broadcast 7252 Front Tank Tow Behind - 6 & 8 Primaries 4-33
Broadcast 7252 Rear Tank Tow Between - 4 & 5 Primaries 4-36
Broadcast 7252 Rear Tank Tow Between - 6 & 8 Primaries 4-39
Broadcast 7252 RearTank Tow Behind - 4 & 5 Primaries 4-42
Broadcast 7252 Rear Tank Tow Behind - 6 & 8 Primaries 4-45
Broadcast 7252 Deflector Mounts 4-48
Divider Head 4-50
Double Shoot Diverter Valve 4-52
Double Shoot Plenum 4-53
Plenum 7252 Broadcast 4-54

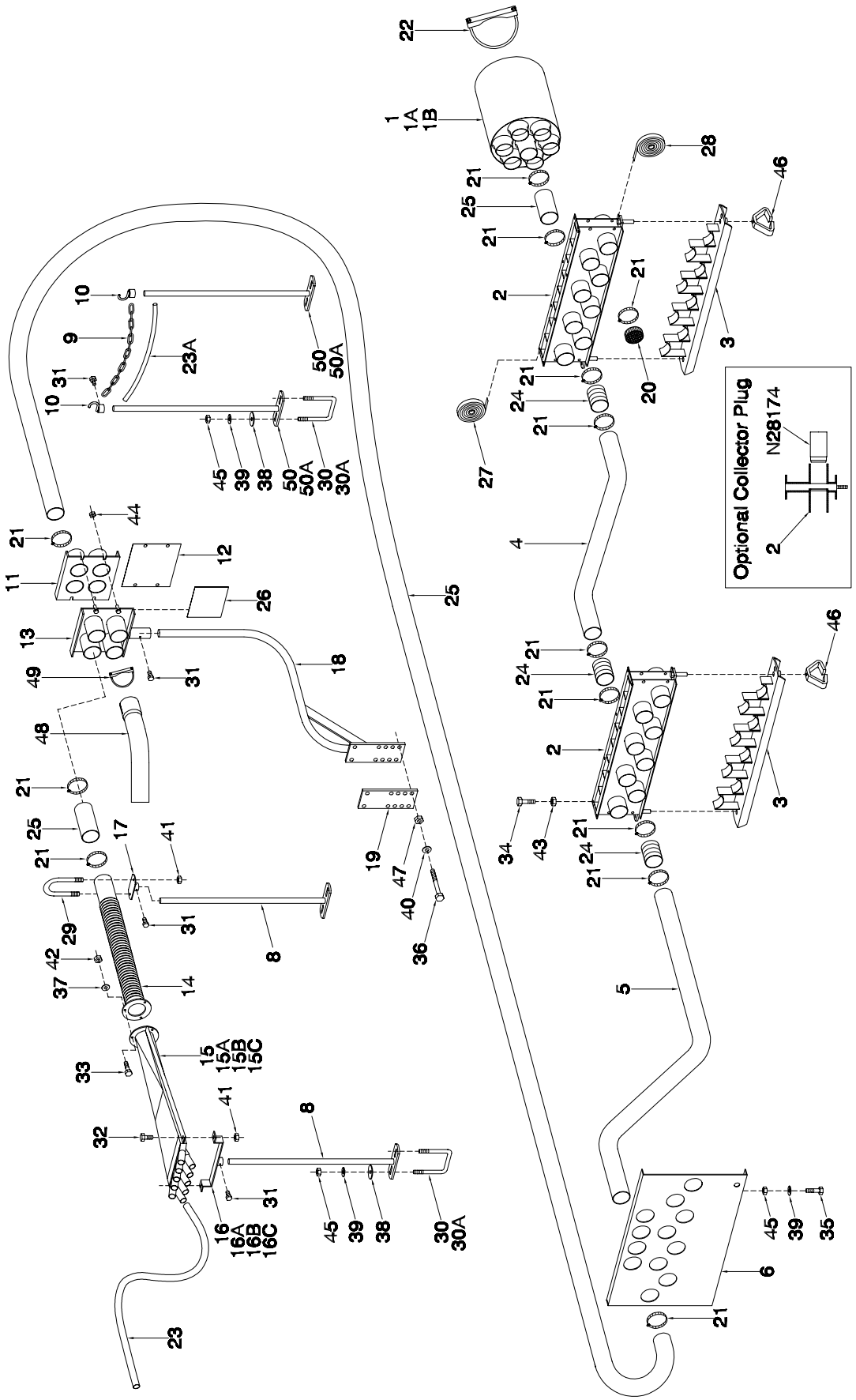
Optional Collector Plug
N28174

Distribution - Single Shoot Tow Behind

Item	Part No.	Description	No: Used					
			21-30 Runs	31-40 Runs	41-50 Runs	51-60 Runs	61-70 Runs	71-80 Runs
1	N19039	Plenum - 7 Outlet	1	1	0	0	0	0
1A	N19042	Plenum - 9 Outlet	0	0	1	1	0	0
1B	N19700	Plenum - 11 Outlet	0	0	0	0	1	1
2	N19690	Collector - 8 Outlet	2	2	2	2	2	2
3	N19693	Cover - Cleanout - 8 Outlet	2	2	2	2	2	2
4	N27045	Tube - Primary - 43 3/4 7130 / 7180	3	4	5	6	7	8
	N27050	Tube - Primary - 55 3/4 7240 / 7300	3	4	5	6	7	8
5	N27330	Tube - Primary - 79 7130 / 7180	3	4	5	6	7	8
	N33361	Tube - Primary - 99 7180LT	3	4	5	6	7	8
	N27340	Tube - Primary - 88 7240 / 7300	3	4	5	6	7	8
6	N27490	Mount Plate - Primary Tube - Single	1	1	1	1	1	1
8	N19531	Support - Bottom - Rod 24	6	8	10	12	14	16
9	N19448	Chain - 80 Link	1	1	1	1	1	1
10	N19717	Hook - Chain	2	2	2	2	2	2
11	N19398	Coupler - Hose	1	1	2	2	2	2
12	N19573	Blank Off Plate	2	2	4	4	4	4
13	N19395	Coupler - Hose	1	1	2	2	2	2
14	N15135	Pipe - Corr Diff - Divider Head	3	4	5	6	7	8
15	N31190	Divider Assembly - 10 Outlet	As req	As req	As req	As req	As req	As req
15A	N31189	Divider Assembly - 9 Outlet	As req	As req	As req	As req	As req	As req
15B	N31188	Divider Assembly - 8 Outlet	As req	As req	As req	As req	As req	As req
15C	N31187	Divider Assembly - 7 Outlet	As req	As req	As req	As req	As req	As req
16	N19406	Support - 10 Outlet	As req	As req	As req	As req	As req	As req
16A	N15595	Support - 9 Outlet	As req	As req	As req	As req	As req	As req
16B	N15107	Support - 8 Outlet	As req	As req	As req	As req	As req	As req
16C	N15594	Support - 7 Outlet	As req	As req	As req	As req	As req	As req
17	N15102	Support - Rear	3	4	5	6	7	8
18	N19410	Base - Hose Coupler	1	1	2	2	2	2
19	N19409	Plate - Mount	1	1	2	2	2	2
20	N11907	Plastic Cap - 2 1/2	24	19	16	11	8	3
21	N11905	Hose Clamp - 2 1/2	60	67	76	83	92	99
22	N15930	U-Clamp - 6 Dia Heavy Duty Flat	1	1	1	1	1	1
23	R480034	Hose - .929 ID x 1.169 OD/ft (75 ft roll)	225 ft	300 ft	375 ft	450 ft	525 ft	600 ft
23A	R480034	Hose - .929 ID x 1.169 OD/ft (75 ft roll)	1.5 ft	1.5 ft	1.5 ft	1.5 ft	1.5 ft	1.5 ft
24	N19428	Hose - 2.52 ID x 2.77 OD x 5 Lg	9	12	15	18	21	24
25	R480055	Hose - 2 1/2 ID/ft Goodyear (100 ft rolls)	75 ft	100 ft	125 ft	150 ft	175 ft	200 ft
26	N19030	Seal Strip - 1/16 x 6 1/2 x 6 1/2 (Bulk/ft)	1	1	2	2	2	2
27	N15716	Seal Strip - 1/4 x 1 (Bulk/ft)	10 ft	10 ft	10 ft	10 ft	10 ft	10 ft
28	N19449	Seal Strip - 3/8 x 1 (Bulk/ft)	10 ft	10 ft	10 ft	10 ft	10 ft	10 ft
29	N15096	U-Bolt - 1/4 x 2 9/16	3	4	5	6	7	8
30	N15098	U-Bolt - 3/8 x 4 x 5	8	10	12	14	16	18
30A	N15097	U-Bolt - 3/8 x 2 x 5	6	8	10	12	14	16
31	N24396	Setscrew - 1/4 x 1/2	9	11	14	16	18	20
32	K-3830	Hex Bolt - 1/4 x 1/2 Lg	6	8	10	12	14	16
33	W-469	Hex Bolt - 1/4 x 3/4 Lg	9	12	15	18	21	24
34	F-1767	Hex Bolt - 5/16 x 3/4 Lg	16	16	16	16	16	16
35	W-475	Hex Bolt - 3/8 x 1 Lg	2	2	2	2	2	2
36	W-496	Hex Bolt - 1/2 x 5 1/2 Lg	4	4	8	8	8	8
37	W-521	Lockwasher - 1/4	9	12	15	18	21	24
38	D-5579	Flatwasher - 3/8	16	20	24	28	32	36
39	W-523	Lockwasher - 3/8	18	22	26	30	34	38
40	W-525	Lockwasher - 1/2	4	4	8	8	8	8
41	D-5277	Serrated Locknut - 1/4	12	16	20	24	28	32
42	W-512	Hex Nut - 1/4	9	12	15	18	21	24
43	D-5278	Serrated Locknut - 5/16	16	16	16	16	16	16
44	D-5279	Serrated Locknut - 3/8	4	4	8	8	8	8
45	W-514	Hex Nut - 3/8	18	22	26	30	34	38
46	N27360	Wing Nut - 1/2	4	4	4	4	4	4
47	W-516	Hex Nut - 1/2	4	4	8	8	8	8
48	N27329	Tube - Primary - 45 degree Elbow	0	2	2	4	4	4
49	N15022	Clamp - Muffler - 2 1/2 Dia	0	2	2	4	4	4
50	N15105	Support - Bottom - Rod 12	2	2	2	0	0	0
50A	N19531	Support - Bottom - Rod 24	0	0	0	2	2	2
	N19000	Decal - “AIRFLOW ARROW” (Not Shown)	4	4	4	4	4	4

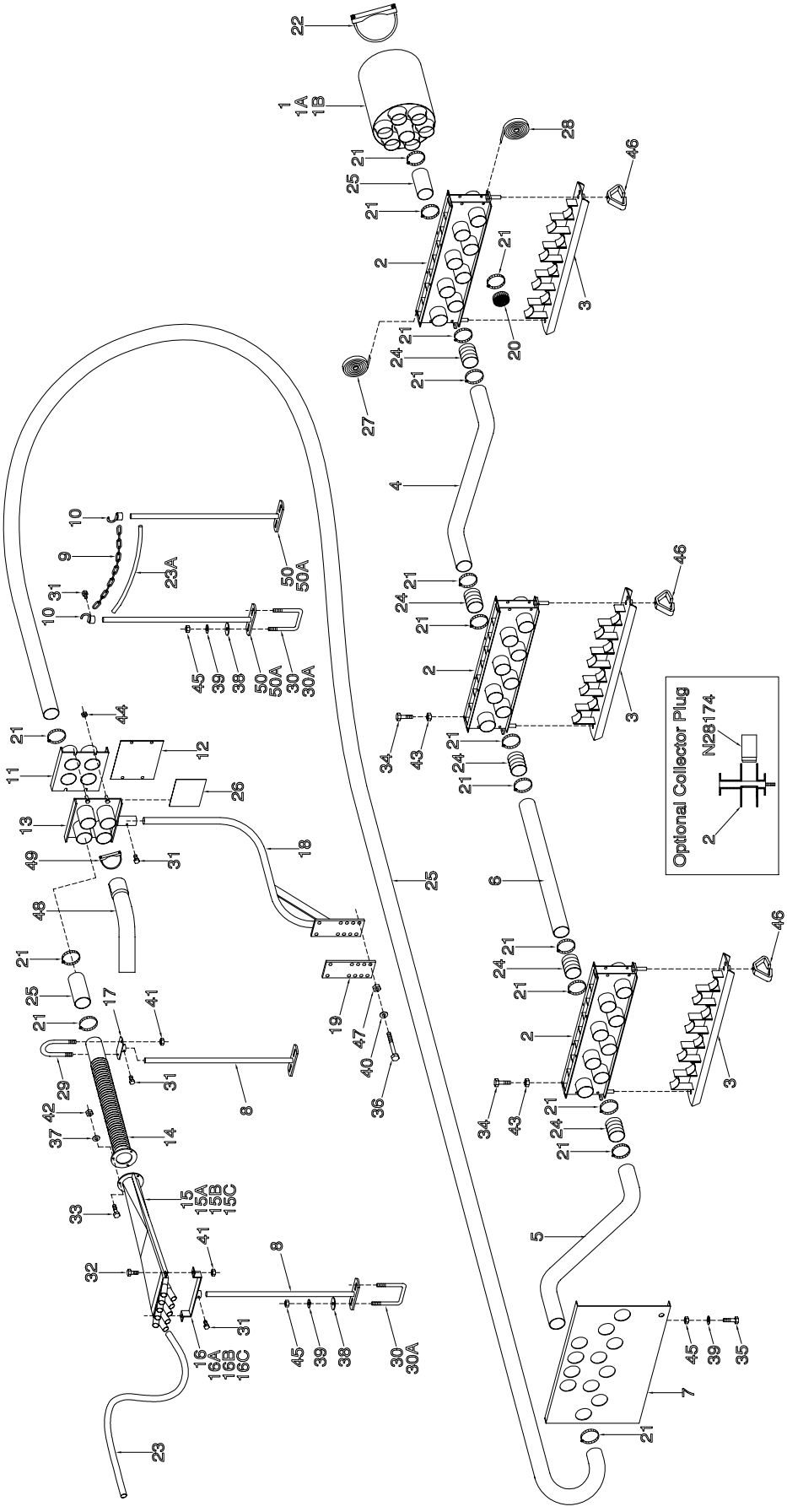
Optional Collector Plug
N28174

Distribution - Single Shoot Tow Behind 7252

Item	Part No.	Description	No: Used					
			21-30 Runs	31-40 Runs	41-50 Runs	51-60 Runs	61-70 Runs	71-80 Runs
1	N19039	Plenum - 7 Outlet	1	1	0	0	0	0
1A	N19042	Plenum - 9 Outlet	0	0	1	1	0	0
1B	N19700	Plenum - 11 Outlet	0	0	0	0	1	1
2	N19690	Collector - 8 Outlet	3	3	3	3	3	3
3	N19693	Cover - Cleanout - 8 Outlet	3	3	3	3	3	3
4	N27045	Tube - Primary - 43 3/4	3	4	5	6	7	8
5	N31536	Tube - Primary - 47 29/32	3	4	5	6	7	8
6	N31537	Tube - Primary - 57	3	4	5	6	7	8
7	N27490	Mount Plate - Primary Tube - Single	1	1	1	1	1	1
8	N19531	Support - Bottom - Rod 24	6	8	10	12	14	16
9	N19448	Chain - 80 Link	1	1	1	1	1	1
10	N19717	Hook - Chain	2	2	2	2	2	2
11	N19398	Coupler Tank - Hose	1	1	2	2	2	2
12	N19573	Blank Off Plate	2	2	4	4	4	4
13	N19395	Coupler - Hose	1	1	2	2	2	2
14	N15135	Pipe - Corr Diff - Divider Head	3	4	5	6	7	8
15	N31190	Divider Assembly - 10 Outlet	As req	As req	As req	As req	As req	As req
15A	N31189	Divider Assembly - 9 Outlet	As req	As req	As req	As req	As req	As req
15B	N31188	Divider Assembly - 8 Outlet	As req	As req	As req	As req	As req	As req
15C	N31187	Divider Assembly - 7 Outlet	As req	As req	As req	As req	As req	As req
16	N19406	Support - 10 Outlet	As req	As req	As req	As req	As req	As req
16A	N15595	Support - 9 Outlet	As req	As req	As req	As req	As req	As req
16B	N15107	Support - 8 Outlet	As req	As req	As req	As req	As req	As req
16C	N15594	Support - 7 Outlet	As req	As req	As req	As req	As req	As req
17	N15102	Support - Rear	3	4	5	6	7	8
18	N19410	Base - Hose Coupler	1	1	2	2	2	2
19	N19409	Plate - Mount	1	1	2	2	2	2
20	N11907	Plastic Cap - 2 1/2	34	27	22	15	10	3
21	N11905	Hose Clamp - 2 1/2	82	91	102	111	122	131
22	N15930	U-Clamp - 6 Dia Heavy Duty Flat	1	1	1	1	1	1
23	R480034	Hose - .929 ID x 1.169 OD/ft (75 ft roll)	225 ft	300 ft	375 ft	450 ft	525 ft	600 ft
23A	R480034	Hose - .929 ID x 1.169 OD/ft (75 ft roll)	1.5 ft	1.5 ft	1.5 ft	1.5 ft	1.5 ft	1.5 ft
24	N19428	Hose - 2.52 ID x 2.77 OD x 5 Lg	15	20	25	30	35	40
25	R480055	Hose - 2 1/2 ID/ft Goodyear (100 ft rolls)	75 ft	100 ft	125 ft	150 ft	175 ft	200 ft
26	N19030	Seal Strip - 1/16 x 6 1/2 x 6 1/2 (Bulk/Ft)	1	1	2	2	2	2
27	N15716	Seal Strip - 1/4 x 1 (Bulk/ft)	15 ft	15 ft	15 ft	15 ft	15 ft	15 ft
28	N19449	Seal Strip - 3/8 x 1 (Bulk/ft)	15 ft	15 ft	15 ft	15 ft	15 ft	15 ft
29	N15096	U-Bolt - 1/4 x 2 9/16	3	4	5	6	7	8
30	N15098	U-Bolt - 3/8 x 4 x 5	8	10	12	14	16	18
30A	N15097	U-Bolt - 3/8 x 2 x 5	6	8	10	12	14	16
31	N24396	Setscrew - 1/4 x 1/2	9	11	14	16	18	20
32	K-3830	Hex Bolt - 1/4 x 1/2 Lg	6	8	10	12	14	16
33	W-469	Hex Bolt - 1/4 x 3/4 Lg	9	12	15	18	21	24
34	F-1767	Hex Bolt - 5/16 x 3/4 Lg	24	24	24	24	24	24
35	W-475	Hex Bolt - 3/8 x 1 Lg	2	2	2	2	2	2
36	W-496	Hex Bolt - 1/2 x 5 1/2 Lg	4	4	8	8	8	8
37	W-521	Lockwasher - 1/4	9	12	15	18	21	24
38	D-5579	Flatwasher - 3/8	16	20	24	28	32	36
39	W-523	Lockwasher - 3/8	18	22	26	30	34	38
40	W-525	Lockwasher - 1/2	4	4	8	8	8	8
41	D-5277	Serrated Locknut - 1/4	12	16	20	24	28	32
42	W-512	Hex Nut - 1/4	9	12	15	18	21	24
43	D-5278	Serrated Locknut - 5/16	24	24	24	24	24	24
44	D-5279	Serrated Locknut - 3/8	4	4	8	8	8	8
45	W-514	Hex Nut - 3/8	18	22	26	30	34	38
46	N27360	Wing Nut - 1/2	6	6	6	6	6	6
47	W-516	Hex Nut - 1/2	4	4	8	8	8	8
48	N27329	Tube - Primary - 45 degree Elbow	0	2	2	4	4	4
49	N15022	Clamp - Muffler - 2 1/2 Dia	0	2	2	4	4	4
50	N15105	Support - Bottom - Rod 12	2	2	2	0	0	0
50A	N19531	Support - Bottom - Rod 24	0	0	0	2	2	2
	N19000	Decal - “AIRFLOW ARROW” (Not Shown)	6	6	6	6	6	6

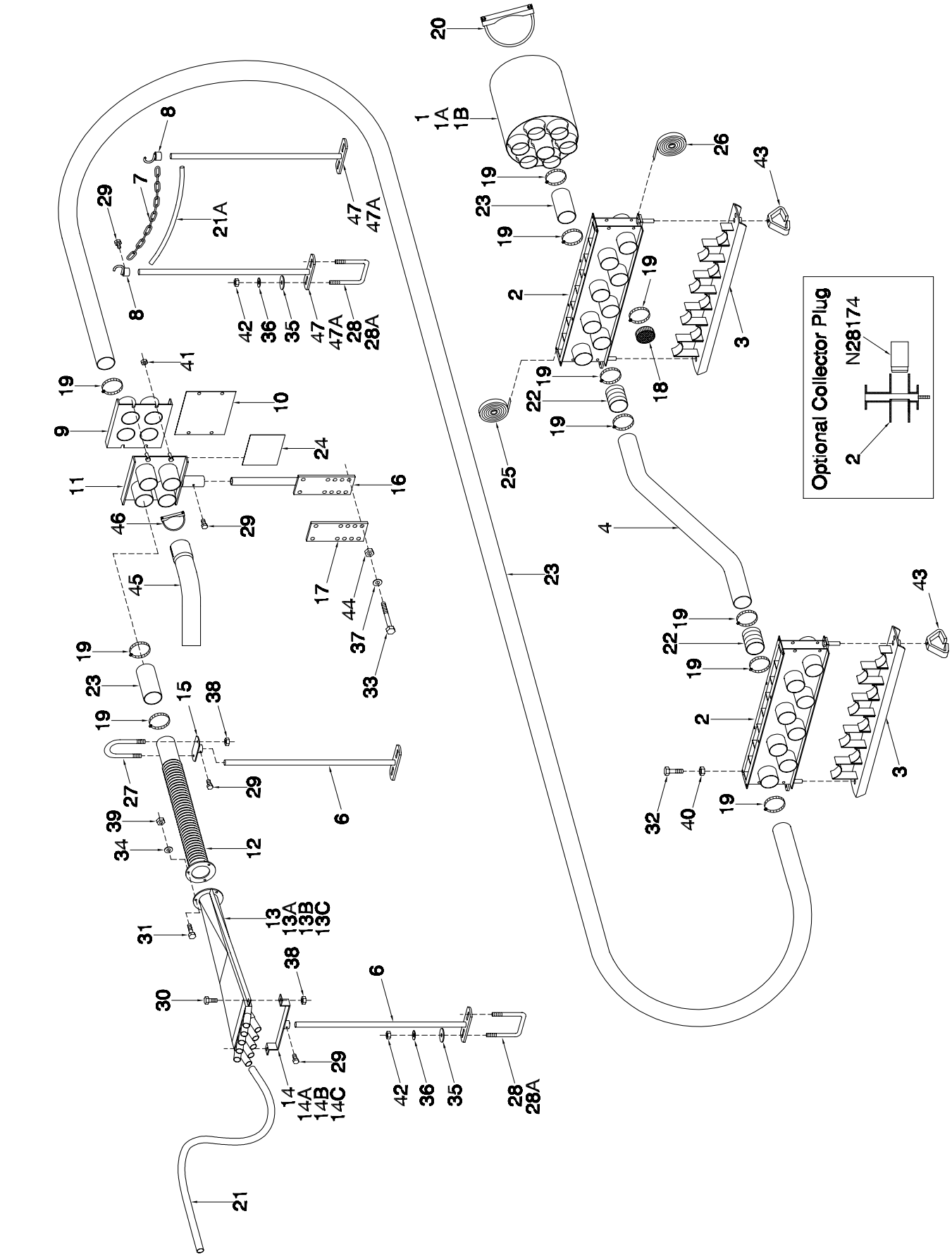
Optional Collector Plug
N28174

Distribution - Single Shoot Tow Between

Item	Part No.	Description	No: Used					
			21-30 Runs	31-40 Runs	41-50 Runs	51-60 Runs	61-70 Runs	71-80 Runs
1	N19039	Plenum - 7 Outlet	1	1	0	0	0	0
1A	N19042	Plenum - 9 Outlet	0	0	1	1	0	0
1B	N19700	Plenum - 11 Outlet	0	0	0	0	1	1
2	N19690	Collector - 8 Outlet	2	2	2	2	2	2
3	N19693	Cover - Cleanout - 8 Outlet	2	2	2	2	2	2
4	N27045	Tube - Primary - 43 3/4 7180	3	4	5	6	7	8
	N27050	Tube - Primary - 55 3/4 7240	3	4	5	6	7	8
6	N19531	Support - Bottom - Rod 24	6	8	10	12	14	16
7	N19448	Chain - 80 Link	1	1	1	1	1	1
8	N19717	Hook - Chain	2	2	2	2	2	2
9	N19398	Coupler - Hose	1	1	2	2	2	2
10	N19573	Blank Off Plate	2	2	4	4	4	4
11	N19395	Coupler - Hose	1	1	2	2	2	2
12	N15135	Pipe - Corr Diff - Divider Head	3	4	5	6	7	8
13	N31190	Divider Assembly - 10 Outlet	As req	As req	As req	As req	As req	As req
13A	N31189	Divider Assembly - 9 Outlet	As req	As req	As req	As req	As req	As req
13B	N31188	Divider Assembly - 8 Outlet	As req	As req	As req	As req	As req	As req
13C	N31187	Divider Assembly - 7 Outlet	As req	As req	As req	As req	As req	As req
14	N19406	Support - 10 Outlet	As req	As req	As req	As req	As req	As req
14A	N15595	Support - 9 Outlet	As req	As req	As req	As req	As req	As req
14B	N15107	Support - 8 Outlet	As req	As req	As req	As req	As req	As req
14C	N15594	Support - 7 Outlet	As req	As req	As req	As req	As req	As req
15	N15102	Support - Rear	3	4	5	6	7	8
16	N19575	Base - Hose Coupler - Straight	1	1	2	2	2	2
17	N19409	Plate - Mount	1	1	2	2	2	2
18	N11907	Plastic Cap - 2 1/2	24	19	16	11	8	3
19	N11905	Hose Clamp - 2 1/2	54	59	66	71	78	83
20	N15930	U-Clamp - 6 Dia Heavy Duty Flat	1	1	1	1	1	1
21	R480034	Hose - .929 ID x 1.169 OD/ft (75 ft roll)	225 ft	300 ft	375 ft	450 ft	525 ft	600 ft
21A	R480034	Hose - .929 ID x 1.169 OD/ft (75 ft roll)	1.5 ft	1.5 ft	1.5 ft	1.5 ft	1.5 ft	1.5 ft
22	N19428	Hose - 2.52 ID x 2.77 OD x 5 Lg	6	8	10	12	14	16
23	R480055	Hose - 2 1/2 ID/ft Goodyear (100 ft rolls)	75 ft	100 ft	125 ft	150 ft	175 ft	200 ft
24	N19030	Seal Strip - 1/16 x 6 1/2 x 6 1/2 (Bulk/ft)	1	1	2	2	2	2
25	N15716	Seal Strip - 1/4 x 1 (Bulk/ft)	10 ft	10 ft	10 ft	10 ft	10 ft	10 ft
26	N19449	Seal Strip - 3/8 x 1 (Bulk/ft)	10 ft	10 ft	10 ft	10 ft	10 ft	10 ft
27	N15096	U-Bolt - 1/4 x 2 9/16	3	4	5	6	7	8
28	N15098	U-Bolt - 3/8 x 4 x 5	8	10	12	14	16	18
28A	N15097	U-Bolt - 3/8 x 2 x 5	6	8	10	12	14	16
29	N24396	Setscrew - 1/4 x 1/2	9	11	14	16	18	20
30	K-3830	Hex Bolt - 1/4 x 1/2 Lg	6	8	10	12	14	16
31	W-469	Hex Bolt - 1/4 x 3/4 Lg	9	12	15	18	21	24
32	F-1767	Hex Bolt - 5/16 x 3/4 Lg	16	16	16	16	16	16
33	W-496	Hex Bolt - 1/2 x 5 1/2 Lg	4	4	8	8	8	8
34	W-521	Lockwasher - 1/4	9	12	15	18	21	24
35	D-5579	Flatwasher - 3/8	16	20	24	28	32	36
36	W-523	Lockwasher - 3/8	16	20	24	28	32	36
37	W-525	Lockwasher - 1/2	4	4	8	8	8	8
38	D-5277	Serrated Locknut - 1/4	12	16	20	24	28	32
39	W-512	Hex Nut - 1/4	9	12	15	18	21	24
40	D-5278	Serrated Locknut - 5/16	16	16	16	16	16	16
41	D-5279	Serrated Locknut - 3/8	4	4	8	8	8	8
42	W-514	Hex Nut - 3/8	16	20	24	28	32	36
43	N27360	Wing Nut - 1/2	4	4	4	4	4	4
44	W-516	Hex Nut - 1/2	4	4	8	8	8	8
45	N27329	Tube - Primary - 45 degree Elbow	0	2	2	4	4	4
46	N15022	Clamp - Muffler - 2 1/2 Dia	0	2	2	4	4	4
47	N15105	Support - Bottom - Rod 12	2	2	2	0	0	0
47A	N19531	Support - Bottom - Rod 24	0	0	0	2	2	2
	N19000	Decal - “AIRFLOW ARROW” (Not Shown)	4	4	4	4	4	4

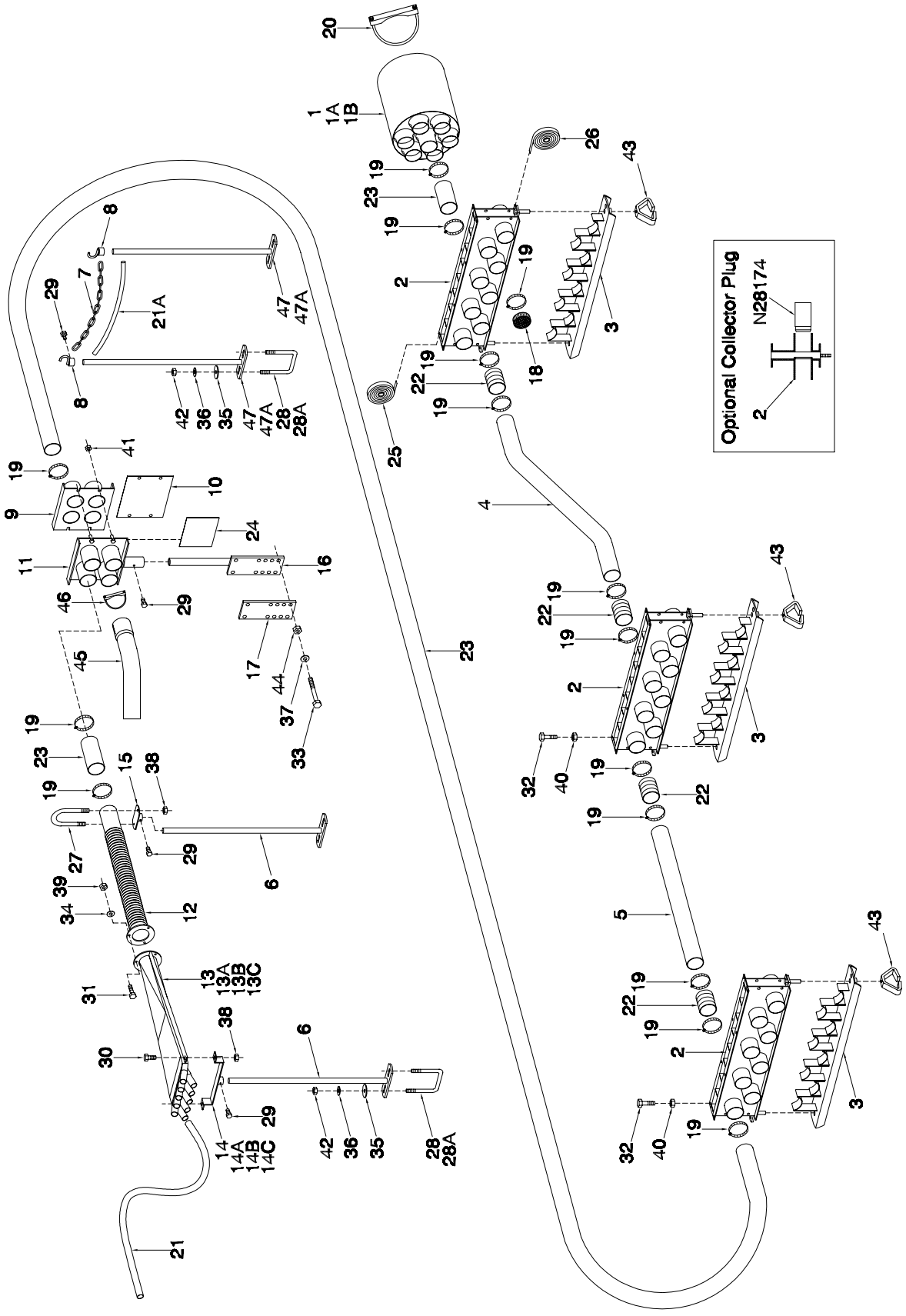
Optional Collector Plug
N28174

Distribution - Single Shoot Tow Between 7252

Item	Part No.	Description	No: Used					
			21-30 Runs	31-40 Runs	41-50 Runs	51-60 Runs	61-70 Runs	71-80 Runs
1	N19039	Plenum - 7 Outlet	1	1	0	0	0	0
1A	N19042	Plenum - 9 Outlet	0	0	1	1	0	0
1B	N19700	Plenum - 11 Outlet	0	0	0	0	1	1
2	N19690	Collector - 8 Outlet	3	3	3	3	3	3
3	N19693	Cover - Cleanout - 8 Outlet	3	3	3	3	3	3
4	N27045	Tube - Primary - 43 3/4	3	4	5	6	7	8
5	N31537	Tube - Primary - 57	3	4	5	6	7	8
6	N19531	Support - Bottom - Rod 24	8	10	12	14	16	18
7	N19448	Chain - 80 Link	1	1	1	1	1	1
8	N19717	Hook - Chain	2	2	2	2	2	2
9	N19398	Coupler - Hose	1	1	2	2	2	2
10	N19573	Blank Off Plate	2	2	4	4	4	4
11	N19395	Coupler - Hose	1	1	2	2	2	2
12	N15135	Pipe - Corr Diff - Divider Head	3	4	5	6	7	8
13	N31190	Divider Assembly - 10 Outlet	As req	As req	As req	As req	As req	As req
13A	N31189	Divider Assembly - 9 Outlet	As req	As req	As req	As req	As req	As req
13B	N31188	Divider Assembly - 8 Outlet	As req	As req	As req	As req	As req	As req
13C	N31187	Divider Assembly - 7 Outlet	As req	As req	As req	As req	As req	As req
14	N19406	Support - 10 Outlet	As req	As req	As req	As req	As req	As req
14A	N15595	Support - 9 Outlet	As req	As req	As req	As req	As req	As req
14B	N15107	Support - 8 Outlet	As req	As req	As req	As req	As req	As req
14C	N15594	Support - 7 Outlet	As req	As req	As req	As req	As req	As req
15	N15102	Support - Rear	3	4	5	6	7	8
16	N19575	Base - Hose Coupler - Straight	1	1	2	2	2	2
17	N19409	Plate - Mount	1	1	2	2	2	2
18	N11907	Plastic Cap - 2 1/2	34	27	22	15	10	3
19	N11905	Hose Clamp - 2 1/2	76	83	92	99	108	115
20	N15930	U-Clamp - 6 Dia Heavy Duty Flat	1	1	1	1	1	1
21	R480034	Hose - .929 ID x 1.169 OD/ft (75 ft roll)	225 ft	300 ft	375 ft	450 ft	525 ft	600 ft
21A	R480034	Hose - .929 ID x 1.169 OD/ft (75 ft roll)	1.5 ft	1.5 ft	1.5 ft	1.5 ft	1.5 ft	1.5 ft
22	N19428	Hose - 2.52 ID x 2.77 OD x 5 Lg	12	16	20	24	28	32
23	R480055	Hose - 2 1/2 ID/ft Goodyear (100 ft rolls)	75 ft	100 ft	125 ft	150 ft	175 ft	200 ft
24	N19030	Seal Strip - 1/16 x 6 1/2 x 6 1/2 (Bulk/ft)	1	1	2	2	2	2
25	N15716	Seal Strip - 1/4 x 1 (Bulk/ft)	15 ft	15 ft	15 ft	15 ft	15 ft	15 ft
26	N19449	Seal Strip - 3/8 x 1 (Bulk/ft)	15 ft	15 ft	15 ft	15 ft	15 ft	15 ft
27	N15096	U-Bolt - 1/4 x 2 9/16	3	4	5	6	7	8
28	N15098	U-Bolt - 3/8 x 4 x 5	8	10	12	14	16	18
28A	N15097	U-Bolt - 3/8 x 2 x 5	6	8	10	12	14	16
29	N24396	Setscrew - 1/4 x 1/2	9	11	14	16	18	20
30	K-3830	Hex Bolt - 1/4 x 1/2 Lg	6	8	10	12	14	16
31	W-469	Hex Bolt - 1/4 x 3/4 Lg	9	12	15	18	21	24
32	F-1767	Hex Bolt - 5/16 x 3/4 Lg	24	24	24	24	24	24
33	W-496	Hex Bolt - 1/2 x 5 1/2 Lg	4	4	8	8	8	8
34	W-521	Lockwasher - 1/4	9	12	15	18	21	24
35	D-5579	Flatwasher - 3/8	16	20	24	28	32	36
36	W-523	Lockwasher - 3/8	16	20	24	28	32	36
37	W-525	Lockwasher - 1/2	4	4	8	8	8	8
38	D-5277	Serrated Locknut - 1/4	12	16	20	24	28	32
39	W-512	Hex Nut - 1/4	9	12	15	18	21	24
40	D-5278	Serrated Locknut - 5/16	24	24	24	24	24	24
41	D-5279	Serrated Locknut - 3/8	4	4	8	8	8	8
42	W-514	Hex Nut - 3/8	16	20	24	28	32	36
43	N27360	Wing Nut - 1/2	6	6	6	6	6	6
44	W-516	Hex Nut - 1/2	4	4	8	8	8	8
45	N27329	Tube - Primary - 45 degree Elbow	0	2	2	4	4	4
46	N15022	Clamp - Muffler - 2 1/2 Dia	0	2	2	4	4	4
47	N15105	Support - Bottom - Rod 12	2	2	2	0	0	0
47A	N19531	Support - Bottom - Rod 24	0	0	0	2	2	2
	N19000	Decal - “AIRFLOW ARROW” (Not Shown)	6	6	6	6	6	6

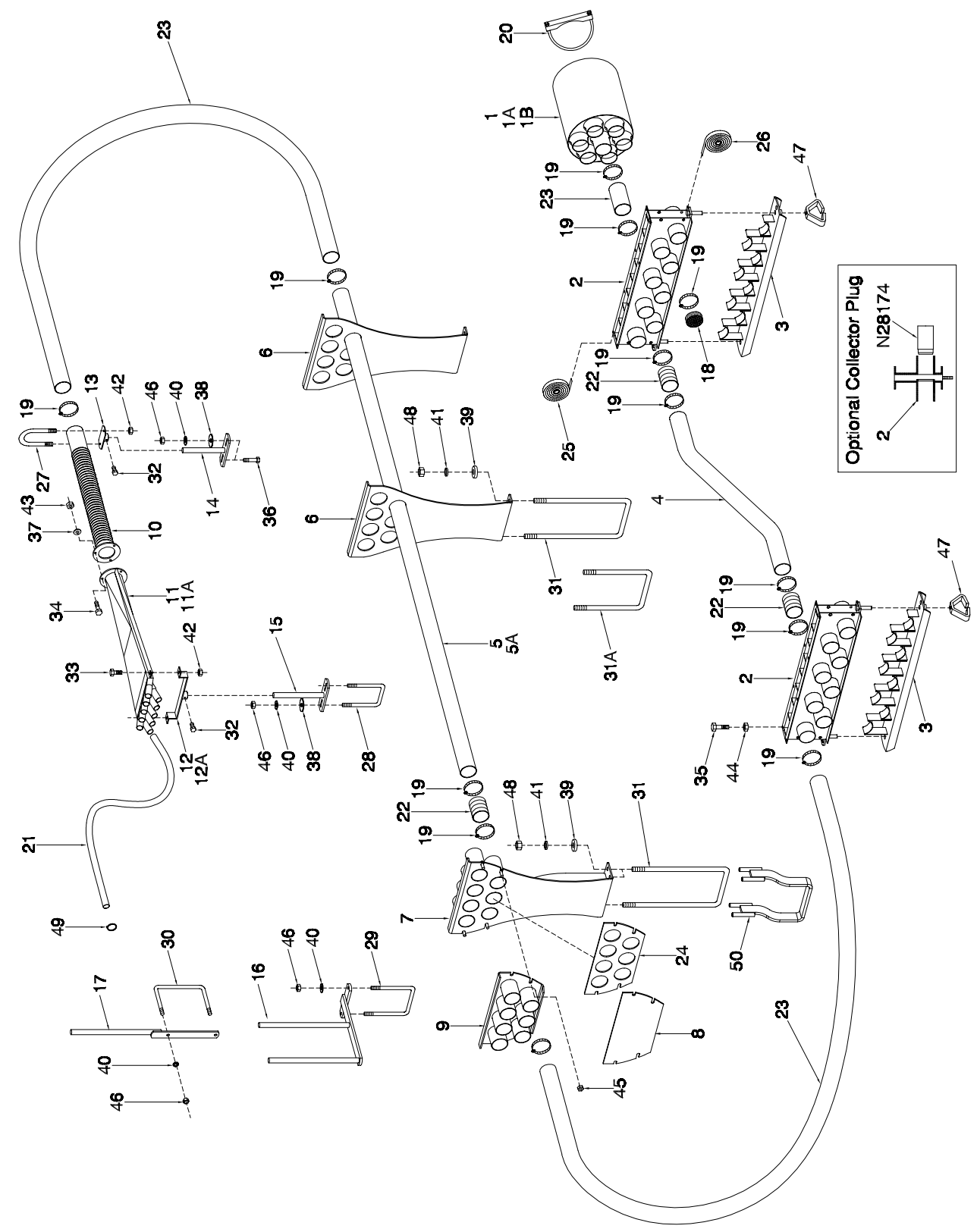
Optional Collector Plug
N28174

Distribution - Single Shoot Tow Between Xpress

Item	Part No.	Description	No: Used 36 R	48 R	64 R
1	N19039	Plenum - 7 Outlet	1	0	0
1A	N19042	Plenum - 9 Outlet	0	1	0
1B	N19700	Plenum - 11 Outlet	0	0	1
2	N19690	Collector - 8 Outlet	2	2	2
3	N19693	Cover - Cleanout - 8 Outlet	2	2	2
4	N27045	Tube - Primary - 43 3/4 (7180)	4	5	7
	N27050	Tube - Primary - 55 3/4 (72400)	4	5	7
5	N34033	Tube - Primary - 168 (30 ft Drill Unit)	4	5	7
	N34021	Tube - Primary - 240 (40 ft Drill Unit)	4	5	7
6	N34010	Support - Hose	2	2	2
7	N34012	Coupler - Hose	1	1	1
8	N34011	Blank Off Plate	2	2	2
9	N34008	Coupler - Hose	1	1	1
10	N15135	Pipe - Corr Diff - Divider Head	4	5	7
11	N31190	Divider Assembly - 10 Outlet	0	3	1
11A	N31189	Divider Assembly - 9 Outlet	4	2	6
12	N19406	Support - 10 Outlet	0	3	1
12A	N15595	Support - 9 Outlet	4	2	6
13	N15102	Support - Rear	4	5	7
14	N34355	Support - Bottom - 6 1/4	0	1	1
15	N34356	Support - Bottom - 7 1/2	0	1	1
16	N34015	Support - Bottom	2	2	2
17	N34056	Support - Bottom	4	4	8
18	N11907	Plastic Cap - 2 1/2	19	16	8
19	N11905	Hose Clamp - 2 1/2	67	76	92
20	N15930	U-Clamp - 6 Dia Heavy Duty Flat	1	1	1
21	R480034	Hose - .929 ID x 1.169 OD/ft (75 ft roll)	225 ft	375 ft	525 ft
22	N19428	Hose - 2.52 ID x 2.77 OD x 5 Lg	12	15	21
23	R480055	Hose - 2 1/2 ID/ft (100 ft rolls)	100 ft	125 ft	175 ft
24	N19030	Seal Strip - 1/16 x 6 1/2 x 13 (Bulk/ft)	1	1	1
25	N15716	Seal Strip - 1/4 x 1 (Bulk/ft)	10 ft	10 ft	10 ft
26	N19449	Seal Strip - 3/8 x 1 (Bulk/ft)	10 ft	10 ft	10 ft
27	N15096	U-Bolt - 1/4 x 2 9/16	4	5	7
28	N34024	U-Bolt - 3/8 x 2 x 6	0	1	1
29	N34025	U-Bolt - 3/8 x 5 x 8	2	2	2
30	N31209	U-Bolt - 3/8 x 7 x 8	4	4	8
31	N34023	U-Bolt - 1/2 x 6 x 11 (40 ft Drill Unit)	4	4	4
31A	N34291	U-Bolt - 1/2 x 6 x 9 (30 ft Drill Unit)	2	2	2
32	N24396	Setscrew - 1/4 x 1/2	8	10	14
33	K-3830	Hex Bolt - 1/4 x 1/2 Lg	8	10	14
34	W-469	Hex Bolt - 1/4 x 3/4 Lg	12	15	21
35	F-1767	Hex Bolt - 5/16 x 3/4 Lg	16	16	16
36	W-480	Hex Bolt - 3/8 x 2 1/2 Lg	0	2	2
37	W-521	Lockwasher - 1/4	12	15	21
38	D-5579	Flatwasher - 3/8	4	4	4
39	S-751	Flatwasher - 1/2	6	6	6
40	W-523	Lockwasher - 3/8	12	16	24
41	W-525	Lockwasher - 1/2	6	6	6
42	D-5277	Serrated Locknut - 1/4	16	20	28
43	W-512	Hex Nut - 1/4	12	15	21
44	D-5278	Serrated Locknut - 5/16	16	16	16
45	D-5279	Serrated Locknut - 3/8	4	4	4
46	W-514	Hex Nut - 3/8	12	16	24
47	N27360	Wing Nut - 1/2	4	4	4
48	W-516	Hex Nut - 1/2	6	6	6
49	N11470	Hose Clamp	36	48	64
50	N34290	U-Bolt Mount Strap (30 ft Drill Unit)	1	1	1
	N19000	Decal - “AIRFLOW ARROW”	4	4	4

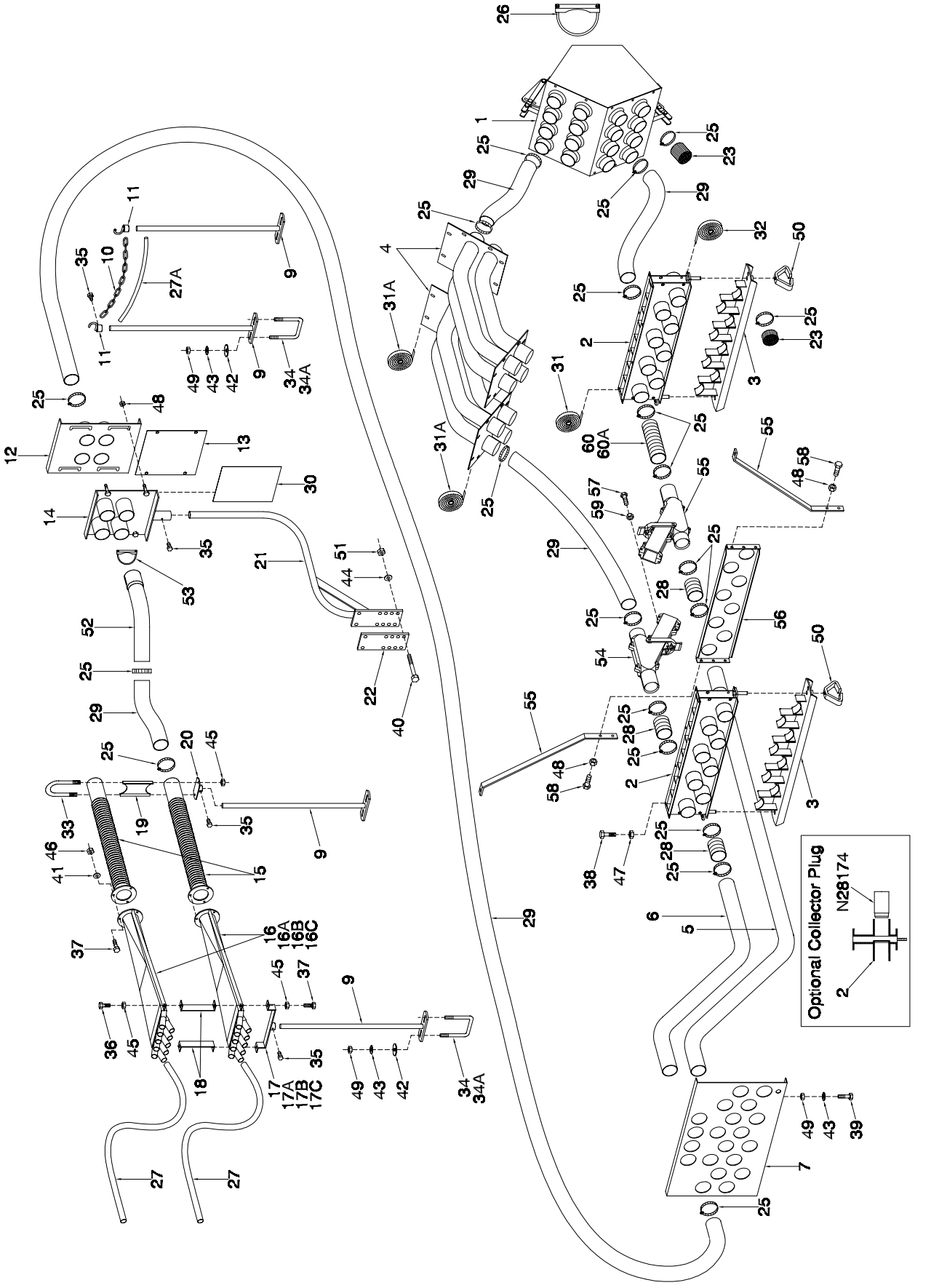
Optional Collector Plug
N28174
2

Distribution - Dual Shoot Tow Behind

Item	Part No.	Description	No: Used					
			21-30 Runs	31-40 Runs	41-50 Runs	51-60 Runs	61-70 Runs	71-80 Runs
1	N28824	Plenum Assembly - Dual Shoot	1	1	1	1	1	1
2	N19690	Collector - 8 Outlet	2	2	2	2	2	2
3	N19693	Cover - Cleanout - 8 Outlet	2	2	2	2	2	2
4	N27450	Pipe Housing - Dual Shoot 7130 / 7180	2	2	2	2	2	2
	N27460	Pipe Housing - Dual Shoot 7240 / 7300 - Prior June 2007	2	2	2	2	2	2
	N44140	Pipe Housing - Dual Shoot 7240 - From June 2007	2	2	2	2	2	2
5	N27335	Tube - Primary - 102 7130 / 7180	3	4	5	6	7	8
	N33362	Tube - Primary - 124 7180LT	3	4	5	6	7	8
	N27345	Tube - Primary - 112 7240 / 7300	3	4	5	6	7	8
6	N27330	Tube - Primary - 79 7130 / 7180	3	4	5	6	7	8
	N33361	Tube - Primary - 99 7180LT	3	4	5	6	7	8
	N27340	Tube - Primary - 88 7240 / 7300	3	4	5	6	7	8
7	N27495	Mount Plate - Primary Tube - Dual	1	1	1	1	1	1
9	N19531	Support - Bottom - Rod 24	8	10	12	14	16	18
10	N19448	Chain - 80 Link	1	1	1	1	1	1
11	N19717	Hook - Chain	2	2	2	2	2	2
12	N27719	Coupler - Hose - Tank - Dual	2	2	3	3	4	4
13	N27721	Cover Plate - Coupler - Dual	4	4	6	6	8	8
14	N28811	Coupler - Hose - Seeder - Dual	2	2	3	3	4	4
15	N15135	Pipe - Corr Diff - Divider Head	6	8	10	12	14	16
16	N31190	Divider Assembly - 10 Outlet	As req	As req	As req	As req	As req	As req
16A	N31189	Divider Assembly - 9 Outlet	As req	As req	As req	As req	As req	As req
16B	N31188	Divider Assembly - 8 Outlet	As req	As req	As req	As req	As req	As req
16C	N31187	Divider Assembly - 7 Outlet	As req	As req	As req	As req	As req	As req
17	N19406	Support - 10 Outlet	As req	As req	As req	As req	As req	As req
17A	N15595	Support - 9 Outlet	As req	As req	As req	As req	As req	As req
17B	N15107	Support - 8 Outlet	As req	As req	As req	As req	As req	As req
17C	N15594	Support - 7 Outlet	As req	As req	As req	As req	As req	As req
18	N16689	Bracket Front - Dual Shoot Heads	6	8	10	12	14	16
19	N16507	Spacer - Rear - Dual Shoot Heads	3	4	5	6	7	8
20	N15102	Support - Rear	3	4	5	6	7	8
21	N19410	Base - Hose Coupler	2	2	3	3	4	4
22	N19409	Plate - Mount	2	2	3	3	4	4
23	N11907	Plastic Cap - Short - 2 1/2 Dia	40	32	24	16	8	
25	N11905	Hose Clamp - 2 1/2 Dia	106	120	134	148	162	176
26	N15930	U-Clamp - 6 Dia Heavy Duty Flat	1	1	1	1	1	1
27	R480034	Hose - .929 ID x 1.169 OD/ft (75 ft roll)	450 ft	600 ft	750 ft	900 ft	1050 ft	1200 ft
27A	R480034	Hose - .929 ID x 1.169 OD/ft (75 ft roll)	1.5 ft	1.5 ft	1.5 ft	1.5 ft	1.5 ft	1.5 ft
28	N19428	Hose - 2.52 ID x 2.77 OD x 5 Lg	9	12	15	18	21	24
29	R480055	Hose - 2 1/2 ID/ft Goodyear (100 ft rolls)	150 ft	200 ft	250 ft	300 ft	350 ft	400ft
30	N28302	Seal - 1/16 x 8 x 10 (Bulk/ft)	2	2	3	3	4	4
31	N15716	Seal - 1/4 x 1 (Bulk/ft)	10 ft	10 ft	10 ft	10 ft	10 ft	10 ft
31A	N15716	Seal - 1/4 x 1 x 38 (Bulk/ft)	4	4	4	4	4	4
32	N19449	Seal - 3/8 x 1 (Bulk/ft)	10 ft	10 ft	10 ft	10 ft	10 ft	10 ft
33	N16504	U-Bolt - 1/4 x 2 9/16	3	4	5	6	7	8
34	N15098	U-Bolt - 3/8 x 4 x 5	8	10	12	14	16	18
34A	N15097	U-Bolt - 3/8 x 2 x 5	6	8	10	12	14	16
35	N24396	Setscrew - 1/4 x 1/2 Lg	10	12	15	17	20	22
36	K-3830	Hex Bolt - 1/4 x 1/2 Lg	6	8	10	12	14	16
37	W-469	Hex Bolt - 1/4 x 3/4 Lg	24	32	40	48	56	64
38	F-1767	Hex Bolt - 5/16 x 3/4 Lg	16	16	16	16	16	16
39	W-475	Hex Bolt - 3/8 x 1 Lg	2	2	2	2	2	2
40	W-496	Hex Bolt - 1/2 x 5 1/2 Lg	8	8	12	12	16	16
41	W-521	Lockwasher - 1/4	18	24	30	36	42	48
42	D-5579	Flatwasher - 3/8	16	20	24	28	32	36
43	W-523	Lockwasher - 3/8	18	22	26	30	34	38
44	W-525	Lockwasher - 1/2	8	8	12	12	16	16
45	D-5277	Serrated Locknut - 1/4	18	24	30	36	42	48
46	W-512	Hex Nut - 1/4	18	24	30	36	42	48

Distribution - Dual Shoot Tow Behind

Item	Part No.	Description	No: Used					
			21-30 Runs	31-40 Runs	41-50 Runs	51-60 Runs	61-70 Runs	71-80 Runs
47	D-5278	Serrated Locknut - 5/16	16	16	16	16	16	16
48	D-5279	Serrated Locknut - 3/8	12	12	16	16	20	20
49	W-514	Hex Nut - 3/8	18	22	26	30	34	38
50	N27360	Wing Nut - 1/2	4	4	4	4	4	4
51	W-516	Hex Nut - 1/2	8	8	12	12	16	16
52	N27329	Tube - Primary - 45 degree Elbow	-	4	4	8	8	8
53	N15022	Clamp - Muffler - 2 1/2 Dia	-	4	4	8	8	8
54	N30068	Diverter Valve Assembly	6	8	10	12	14	16
55	N28813	Strap - Mount Bracket	2	2	2	2	2	2
56	N28814	Mount Plate - Dual Shoot	1	1	1	1	1	1
57	W-470	Hex Bolt - 1/4 x 1 1/4 Lg	24	32	40	48	56	64
58	W-867	Hex Bolt - 3/8 x 3/4 Lg	4	4	4	4	4	4
59	N22778	Locknut - 1/4 Nylon Insert	24	32	40	48	56	64
60	N29061	Hose - 2 1/2 Dia x 17 Lg 7130 / 7180	3	4	5	6	7	8
60A	N29062	Hose - 2 1/2 Dia x 29 Lg 7240 / 7300	3	4	5	6	7	8
	N19000	Decal - “AIRFLOW ARROW” (Not Shown)	4	4	4	4	4	4

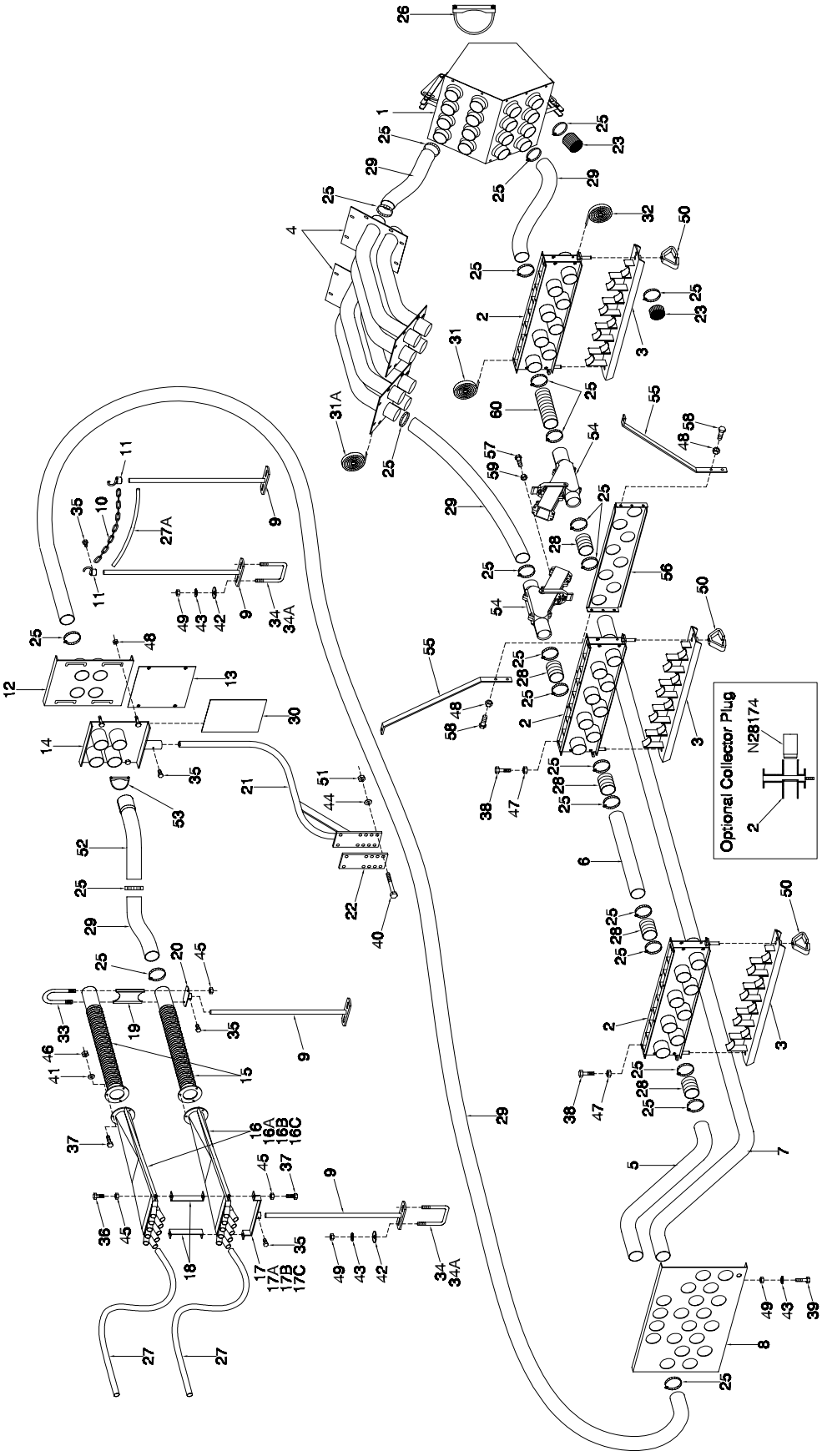
Optional Collector Plug
N28174

Distribution - Dual Shoot Tow Behind 7252

Item	Part No.	Description	No: Used					
			21-30 Runs	31-40 Runs	41-50 Runs	51-60 Runs	61-70 Runs	71-80 Runs
1	N28824	Plenum Assembly - Dual Shoot	1	1	1	1	1	1
2	N19690	Collector - 8 Outlet	3	3	3	3	3	3
3	N19693	Cover - Cleanout - 8 Outlet	3	3	3	3	3	3
4	N27450	Pipe Housing - Dual Shoot	2	2	2	2	2	2
5	N31536	Tube - Primary - 47 29/32	3	4	5	6	7	8
6	N31537	Tube - Primary - 57	3	4	5	6	7	8
7	N31538	Tube - Primary - 139 3/16	3	4	5	6	7	8
8	N27495	Mount Plate - Primary Tube - Dual	1	1	1	1	1	1
9	N19531	Support - Bottom - Rod 24	8	10	12	14	16	18
10	N19448	Chain - 80 Link	1	1	1	1	1	1
11	N19717	Hook - Chain	2	2	2	2	2	2
12	N27719	Coupler - Hose - Tank - Dual	2	2	3	3	4	4
13	N27721	Cover Plate - Coupler - Dual	4	4	6	6	8	8
14	N28811	Coupler - Hose - Seeder - Dual	2	2	3	3	4	4
15	N15135	Pipe - Corr Diff - Divider Head	6	8	10	12	14	16
16	N31190	Divider Assembly - 10 Outlet	As req	As req	As req	As req	As req	As req
16A	N31189	Divider Assembly - 9 Outlet	As req	As req	As req	As req	As req	As req
16B	N31188	Divider Assembly - 8 Outlet	As req	As req	As req	As req	As req	As req
16C	N31187	Divider Assembly - 7 Outlet	As req	As req	As req	As req	As req	As req
17	N19406	Support - 10 Outlet	As req	As req	As req	As req	As req	As req
17A	N15595	Support - 9 Outlet	As req	As req	As req	As req	As req	As req
17B	N15107	Support - 8 Outlet	As req	As req	As req	As req	As req	As req
17C	N15594	Support - 7 Outlet	As req	As req	As req	As req	As req	As req
18	N16689	Bracket Front - Dual Shoot Heads	6	8	10	12	14	16
19	N16507	Spacer - Rear - Dual Shoot Heads	3	4	5	6	7	8
20	N15102	Support - Rear	3	4	5	6	7	8
21	N19410	Base - Hose Coupler	2	2	3	3	4	4
22	N19409	Plate - Mount	2	2	3	3	4	4
23	N11907	Plastic Cap - Short - 2 1/2 Dia	50	40	30	20	10	
25	N11905	Hose Clamp - 2 1/2 Dia	128	144	160	176	192	208
26	N15930	U-Clamp - 6 Dia Heavy Duty Flat	1	1	1	1	1	1
27	R480034	Hose - .929 ID x 1.169 OD/ft (75 ft roll)	450 ft	600 ft	750 ft	900 ft	1050 ft	1200ft
27A	R480034	Hose - .929 ID x 1.169 OD/ft (75 ft roll)	1.5 ft	1.5 ft	1.5 ft	1.5 ft	1.5 ft	1.5 ft
28	N19428	Hose - 2.52 ID x 2.77 OD x 5 Lg	15	20	25	30	35	40
29	R480055	Hose - 2 1/2 ID/ft Goodyear (100 ft rolls)	150 ft	200 ft	250 ft	300 ft	350 ft	400 ft
30	N28302	Seal - 1/16 x 8 x 10 (Bulk/ft)	2	2	3	3	4	4
31	N15716	Seal - 1/4 x 1 (Bulk/ft)	12.5 ft	12.5 ft	12.5 ft	12.5 ft	12.5 ft	12.5 ft
31A	N15716	Seal - 1/4 x 1 x 38 (Bulk/ft)	6	6	6	6	6	6
32	N19449	Seal - 3/8 x 1 (Bulk/ft)	15 ft	15 ft	15 ft	15 ft	15 ft	15 ft
33	N16504	U-Bolt - 1/4 x 2 9/16	3	4	5	6	7	8
34	N15098	U-Bolt - 3/8 x 4 x 5	8	10	12	14	16	18
34A	N15097	U-Bolt - 3/8 x 2 x 5	6	8	10	12	14	16
35	N24396	Setscrew - 1/4 x 1/2 Lg	10	12	15	17	20	22
36	K-3830	Hex Bolt - 1/4 x 1/2 Lg	6	8	10	12	14	16
37	W-469	Hex Bolt - 1/4 x 3/4 Lg	24	32	40	48	56	64
38	F-1767	Hex Bolt - 5/16 x 3/4 Lg	24	24	24	24	24	24
39	W-475	Hex Bolt - 3/8 x 1 Lg	2	2	2	2	2	2
40	W-496	Hex Bolt - 1/2 x 5 1/2 Lg	8	8	12	12	16	16
41	W-521	Lockwasher - 1/4	18	24	30	36	42	48
42	D-5579	Flatwasher - 3/8	16	20	24	28	32	36
43	W-523	Lockwasher - 3/8	18	22	26	30	34	38
44	W-525	Lockwasher - 1/2	8	8	12	12	16	16

Distribution - Dual Shoot Tow Behind 7252

Item	Part No.	Description	No: Used					
			21-30 Runs	31-40 Runs	41-50 Runs	51-60 Runs	61-70 Runs	71-80 Runs
45	D-5277	Serrated Locknut - 1/4	18	24	30	36	42	48
46	W-512	Hex Nut - 1/4	18	24	30	36	42	48
47	D-5278	Serrated Locknut - 5/16	24	24	24	24	24	24
48	D-5279	Serrated Locknut - 3/8	12	12	16	16	20	20
49	W-514	Hex Nut - 3/8	18	22	26	30	34	38
50	N27360	Wing Nut - 1/2	6	6	6	6	6	6
51	W-516	Hex Nut - 1/2	8	8	12	12	16	16
52	N27329	Tube - Primary - 45 degree Elbow	0	4	4	8	8	8
53	N15022	Clamp - Muffler - 2 1/2 Dia	0	4	4	8	8	8
54	N30068	Diverter Valve Assembly	6	8	10	12	14	16
55	N28813	Strap - Mount Bracket	2	2	2	2	2	2
56	N28814	Mount Plate - Dual Shoot	1	1	1	1	1	1
57	W-470	Hex Bolt - 1/4 x 1 1/4 Lg	12	16	20	24	28	32
58	W-867	Hex Bolt - 3/8 x 3/4 Lg	4	4	4	4	4	4
59	N22778	Locknut - 1/4 Nylon Insert	12	16	20	24	28	32
60	N29061	Hose - 2 1/2 Dia x 17 Lg	3	4	5	6	7	8
	N19000	Decal - “AIRFLOW ARROW” (Not Shown)	6	6	6	6	6	6

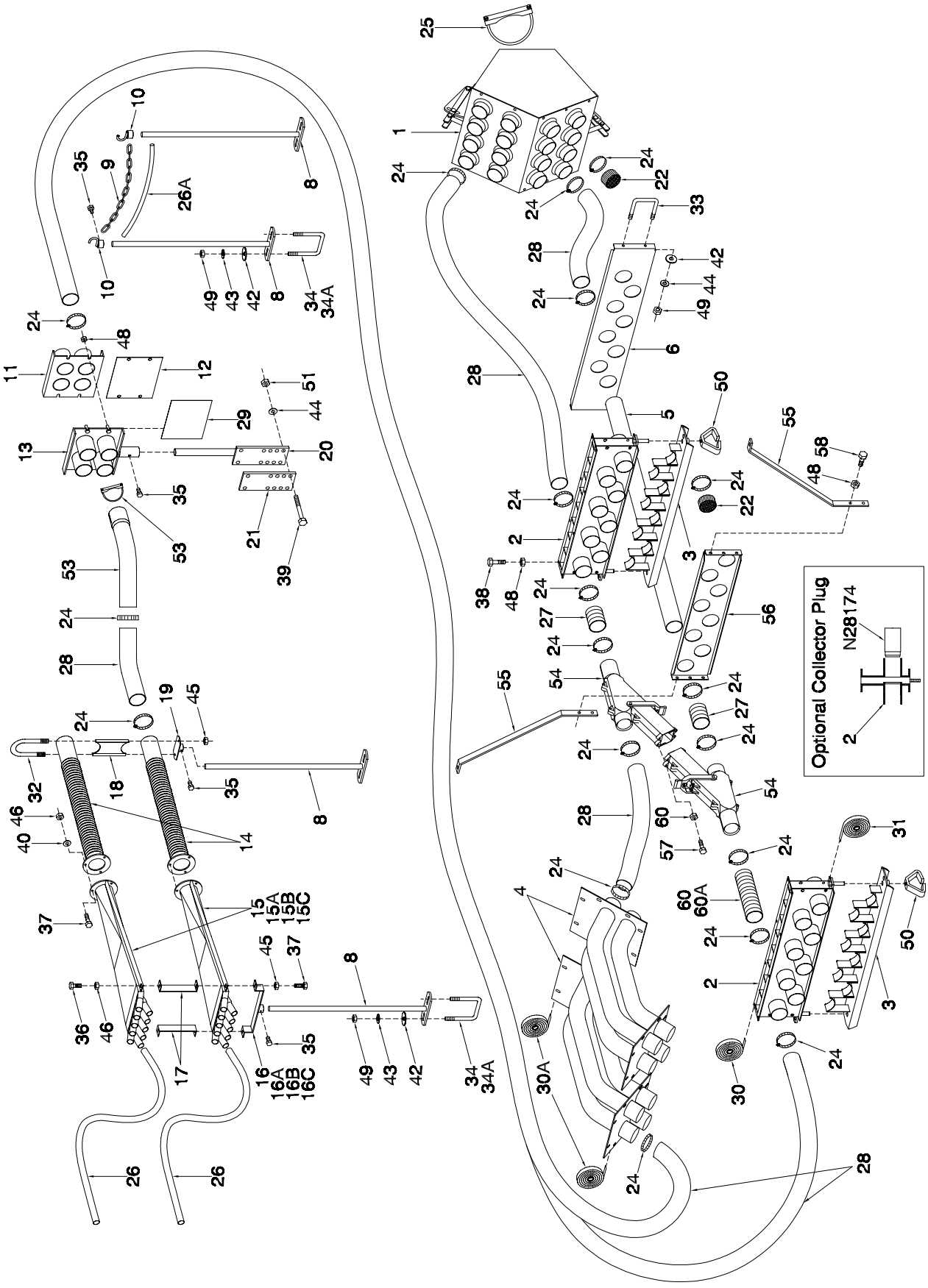
Optional Collector Plug
N28174

Distribution - Dual Shoot Tow Between

Item	Part No.	Description	No: Used					
			21-30 Runs	31-40 Runs	41-50 Runs	51-60 Runs	61-70 Runs	71-80 Runs
1	N28824	Plenum Assembly - Dual Shoot	1	1	1	1	1	1
2	N19690	Collector - 8 Outlet	2	2	2	2	2	2
3	N19693	Cover - Cleanout - 8 Outlet	2	2	2	2	2	2
4	N27450	Pipe Housing - Dual Shoot 7180	2	2	2	2	2	2
	N27460	Pipe Housing - Dual Shoot 7240 - Prior to June 2007	2	2	2	2	2	2
	N44140	Pipe Housing - Dual Shoot 7240 - June 2007	2	2	2	2	2	2
5	N28825	Tube - Primary - 31 1/8	3	4	5	6	7	8
6	N27707	Mount Plate - Dual Between 7180	1	1	1	1	1	1
	N27872	Mount Plate - Dual Between 7240	1	1	1	1	1	1
8	N19531	Support - Bottom - Rod 24	8	10	12	14	16	18
9	N19448	Chain - 80 Link	1	1	1	1	1	1
10	N19717	Hook - Chain	2	2	2	2	2	2
11	N19398	Coupler - Hose - Tank	2	2	3	3	4	4
12	N19573	Blank Off Plate	4	4	6	6	8	8
13	N19395	Coupler - Hose - Seeder	2	2	3	3	4	4
14	N15135	Pipe - Corr Diff - Divider Head	6	8	10	12	14	16
15	N31190	Divider Assembly - 10 Outlet	As req	As req	As req	As req	As req	As req
15A	N31189	Divider Assembly - 9 Outlet	As req	As req	As req	As req	As req	As req
15B	N31188	Divider Assembly - 8 Outlet	As req	As req	As req	As req	As req	As req
15C	N31187	Divider Assembly - 7 Outlet	As req	As req	As req	As req	As req	As req
16	N19406	Support - 10 Outlet	As req	As req	As req	As req	As req	As req
16A	N15595	Support - 9 Outlet	As req	As req	As req	As req	As req	As req
16B	N15107	Support - 8 Outlet	As req	As req	As req	As req	As req	As req
16C	N15594	Support - 7 Outlet	As req	As req	As req	As req	As req	As req
17	N16689	Bracket Front - Dual Shoot Heads	6	8	10	12	14	16
18	N16507	Spacer - Rear - Dual Shoot Heads	3	4	5	6	7	8
19	N15102	Support - Rear	3	4	5	6	7	8
20	N19575	Base - Hose Coupler - Straight	2	2	3	3	4	4
21	N19409	Plate - Mount	2	2	3	3	4	4
22	N11907	Plastic Cap - Short - 2 1/2 Dia	40	32	24	16	8	
24	N11905	Hose Clamp - 2 1/2 Dia	100	112	124	136	148	160
25	N15930	U-Clamp - 6 Dia Heavy Duty Flat	1	1	1	1	1	1
26	R480034	Hose - .929 ID x 1.169 OD/ft (75 ft roll)	450 ft	600 ft	750 ft	900 ft	1050 ft	1200ft
26A	R480034	Hose - .929 ID x 1.169 OD/ft (75 ft roll)	1.5 ft	1.5 ft	1.5 ft	1.5 ft	1.5 ft	1.5 ft
27	N19428	Hose - 2.52 ID x 2.77 OD x 5 Lg	6	8	10	12	14	16
28	R480055	Hose - 2 1/2 ID/ft Goodyear (100 ft rolls)	150 ft	200 ft	250 ft	300 ft	350 ft	400 ft
29	N19030	Seal - 1/16 x 6 1/2 x 6 1/2 (Bulk/ft)	2	2	3	3	4	4
30	N15716	Seal - 1/4 x 1 (Bulk/ft)	10 ft	10 ft	10 ft	10 ft	10 ft	10 ft
30A	N15716	Seal - 1/4 x 1 x 38 (Bulk/ft)	4	4	4	4	4	4
31	N19449	Seal - 3/8 x 1 (Bulk/ft)	10 ft	10 ft	10 ft	10 ft	10 ft	10 ft
32	N16504	U-Bolt - 1/4 x 2 9/16	3	4	5	6	7	8
33	N27709	U-Bolt - 3/8 x 3 3/8 x 2 3/4	2	2	2	2	2	2
34	N15098	U-Bolt - 3/8 x 4 x 5	8	10	12	14	16	18
34A	N15097	U-Bolt - 3/8 x 2 x 5	6	8	10	12	14	16
35	N24396	Setscrew - 1/4 x1/2 Lg	10	12	15	17	20	22
36	K-3830	Hex Bolt - 1/4 x 1/2 Lg	6	8	10	12	14	16
37	W-469	Hex Bolt - 1/4 x 3/4 Lg	24	32	40	48	56	64
38	F-1767	Hex Bolt - 5/16 x 3/4 Lg	16	16	16	16	16	16
39	W-496	Hex Bolt - 1/2 x 5 1/2 Lg	8	8	12	12	16	16
40	W-521	Lockwasher - 1/4	18	24	30	36	42	48
41	D-5489	Flatwasher - 3/8	4	4	4	4	4	4
42	D-5579	Flatwasher - 3/8	16	20	24	28	32	36
43	W-523	Lockwasher - 3/8	20	24	28	32	36	40

Distribution - Tow Between Dual Shoot

Item	Part No.	Description	No: Used					
			21-30 Runs	31-40 Runs	41-50 Runs	51-60 Runs	61-70 Runs	71-80 Runs
44	W-525	Lockwasher - 1/2	8	8	12	12	16	16
45	D-5277	Serrated Locknut - 1/4	18	24	30	36	42	48
46	W-512	Hex Nut - 1/4	18	24	30	36	42	48
47	D-5278	Serrated Locknut - 5/16	16	16	16	16	16	16
48	D-5279	Serrated Locknut - 3/8	12	12	16	16	20	20
49	W-514	Hex Nut - 3/8	20	24	28	32	36	40
50	N27360	Wing Nut - 1/2	4	4	4	4	4	4
51	W-516	Hex Nut - 1/2	8	8	12	12	16	16
52	N27329	Tube - Primary - 45 degree Elbow	0	4	4	8	8	8
53	N15022	Clamp - Muffler - 2 1/2 Dia	0	4	4	8	8	8
54	N30068	Diverter Valve Assembly	6	8	10	12	14	16
55	N28813	Strap - Mount Bracket	2	2	2	2	2	2
56	N28814	Mount Plate - Dual Shoot	1	1	1	1	1	1
57	W-470	Hex Bolt - 1/4 x 1 1/4 Lg	24	32	40	48	56	64
58	W-867	Hex Bolt - 3/8 x 3/4 Lg	4	4	4	4	4	4
59	N22778	Locknut - 1/4 Nylon Insert	24	32	40	48	56	64
60	N29061	Hose - 2 1/2 Dia x 17 Lg 7180	3	4	5	6	7	8
60A	N29062	Hose - 2 1/2 Dia x 29 Lg 7240	3	4	5	6	7	8
	N19000	Decal - “AIRFLOW ARROW” (Not Shown)	4	4	4	4	4	4

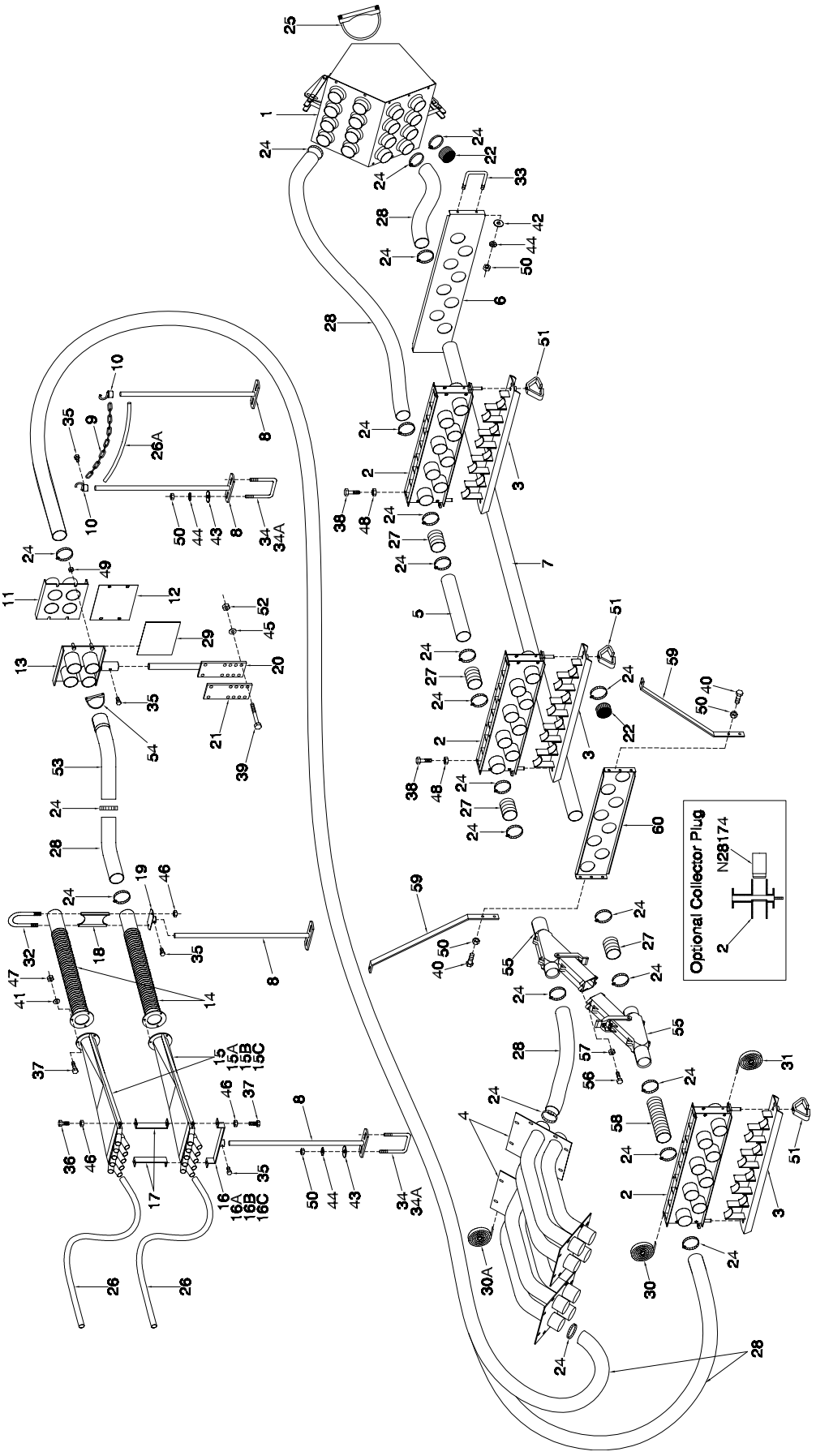
Optional Collector Plug
N28174

Distribution - Dual Shoot Tow Between 7252

Item	Part No.	Description	No: Used					
			21-30 Runs	31-40 Runs	41-50 Runs	51-60 Runs	61-70 Runs	71-80 Runs
1	N28824	Plenum Assembly - Dual Shoot	1	1	1	1	1	1
2	N19690	Collector - 8 Outlet	3	3	3	3	3	3
3	N19693	Cover - Cleanout - 8 Outlet	3	3	3	3	3	3
4	N27450	Pipe Housing - Dual Shoot	2	2	2	2	2	2
5	N31537	Tube - Primary - 57	3	4	5	6	7	8
6	N27872	Mount Plate - Dual Between	1	1	1	1	1	1
7	N31539	Tube - Primary - 87	3	4	5	6	7	8
8	N19531	Support - Bottom - Rod 24	8	10	12	14	16	18
9	N19448	Chain - 80 Link	1	1	1	1	1	1
10	N19717	Hook - Chain	2	2	2	2	2	2
11	N19398	Coupler - Hose - Tank	2	2	3	3	4	4
12	N19573	Blank Off Plate	4	4	6	6	8	8
13	N19395	Coupler - Hose - Seeder	2	2	3	3	4	4
14	N15135	Pipe - Corr Diff - Divider Head	6	8	10	12	14	16
15	N31190	Divider Assembly - 10 Outlet	As req	As req	As req	As req	As req	As req
15A	N31189	Divider Assembly - 9 Outlet	As req	As req	As req	As req	As req	As req
15B	N31188	Divider Assembly - 8 Outlet	As req	As req	As req	As req	As req	As req
15C	N31187	Divider Assembly - 7 Outlet	As req	As req	As req	As req	As req	As req
16	N19406	Support - 10 Outlet	As req	As req	As req	As req	As req	As req
16A	N15595	Support - 9 Outlet	As req	As req	As req	As req	As req	As req
16B	N15107	Support - 8 Outlet	As req	As req	As req	As req	As req	As req
16C	N15594	Support - 7 Outlet	As req	As req	As req	As req	As req	As req
17	N16689	Bracket Front - Dual Shoot Heads	6	8	10	12	14	16
18	N16507	Spacer - Rear - Dual Shoot Heads	3	4	5	6	7	8
19	N15102	Support - Rear	3	4	5	6	7	8
20	N19575	Base - Hose Coupler - Straight	2	2	3	3	4	4
21	N19409	Plate - Mount	2	2	3	3	4	4
22	N11907	Plastic Cap - Short - 2 1/2 Dia	50	40	30	20	10	
24	N11905	Hose Clamp - 2 1/2 Dia	122	136	150	164	178	198
25	N15930	U-Clamp - 6 Dia Heavy Duty Flat	1	1	1	1	1	1
26	R480034	Hose - .929 ID x 1.169 OD/ft (75 ft roll)	450 ft	600 ft	750 ft	900 ft	1050 ft	1200ft
26A	R480034	Hose - .929 ID x 1.169 OD/ft (75 ft roll)	1.5 ft	1.5 ft	1.5 ft	1.5 ft	1.5 ft	1.5 ft
27	N19428	Hose - 2.52 ID x 2.77 OD x 5 Lg	12	16	20	24	28	32
28	R480055	Hose - 2 1/2 ID/ft Goodyear (100 ft rolls)	150 ft	200 ft	250 ft	300 ft	350 ft	400 ft
29	N19030	Seal - 1/16 x 6 1/2 x 6 1/2 (Bulk/ft)	2	2	3	3	4	4
30	N15716	Seal - 1/4 x 1 (Bulk/ft)	12.5 ft	12.5 ft	12.5 ft	12.5 ft	12.5 ft	12.5 ft
30A	N15716	Seal - 1/4 x 1 x 38 (Bulk/ft)	6	6	6	6	6	6
31	N19449	Seal - 3/8 x 1 (Bulk/ft)	15 ft	15 ft	15 ft	15 ft	15 ft	15 ft
32	N16504	U-Bolt - 1/4 x 2 9/16	3	4	5	6	7	8
33	N27709	U-Bolt - 3/8 x 3 3/8 x 2 3/4	2	2	2	2	2	2
34	N15098	U-Bolt - 3/8 x 4 x 5	8	10	12	14	16	18
34A	N15097	U-Bolt - 3/8 x 2 x 5	6	8	10	12	14	16
35	N24396	Setscrew - 1/4 x 1/2 Lg	10	12	15	17	20	22
36	K-3830	Hex Bolt - 1/4 x 1/2 Lg	6	8	10	12	14	16
37	W-469	Hex Bolt - 1/4 x 3/4 Lg	24	32	40	48	56	64
38	F-1767	Hex Bolt - 5/16 x 3/4 Lg	24	24	24	24	24	24
39	W-496	Hex Bolt - 1/2 x 5 1/2 Lg	8	8	12	12	16	16
40	W-867	Hex Bolt - 3/8 x 3/4 Lg	4	4	4	4	4	4
41	W-521	Lockwasher - 1/4	18	24	30	36	42	48
42	D-5489	Flatwasher - 3/8	4	4	4	4	4	4
43	D-5579	Flatwasher - 3/8	16	20	24	28	32	36
44	W-523	Lockwasher - 3/8	20	24	28	32	36	40

Distribution -Dual Shoot Tow Between 7252

Item	Part No.	Description	No: Used					
			21-30 Runs	31-40 Runs	41-50 Runs	51-60 Runs	61-70 Runs	71-80 Runs
45	W-525	Lockwasher - 1/2	8	8	12	12	16	16
46	D-5277	Serrated Locknut - 1/4	18	24	30	36	42	48
47	W-512	Hex Nut - 1/4	18	24	30	36	42	48
48	D-5278	Serrated Locknut - 5/16	24	24	24	24	24	24
49	D-5279	Serrated Locknut - 3/8	12	12	16	16	20	20
50	W-514	Hex Nut - 3/8	26	30	34	38	42	46
51	N27360	Wing Nut - 1/2	6	6	6	6	6	6
52	W-516	Hex Nut - 1/2	8	8	12	12	16	16
53	N27329	Tube - Primary - 45 degree Elbow	0	4	4	8	8	8
54	N15022	Clamp - Muffler - 2 1/2 Dia	0	4	4	8	8	8
55	N30068	Diverter Valve Assembly	6	8	10	12	14	16
56	W-470	Hex Bolt - 1/4 x 1 1/4 Lg	12	16	20	24	28	32
57	N22778	Locknut - 1/4 Nylon Insert	12	16	20	24	28	32
58	N29061	Hose - 2 1/2 Dia x 17 Lg	3	4	5	6	7	8
59	N28813	Strap - Mounted Bracket	2	2	2	2	2	2
60	N28814	Mount Plate - Dual Shoot	1	1	1	1	1	1
	N19000	Decal - “AIRFLOW ARROW” (Not Shown)	6	6	6	6	6	6

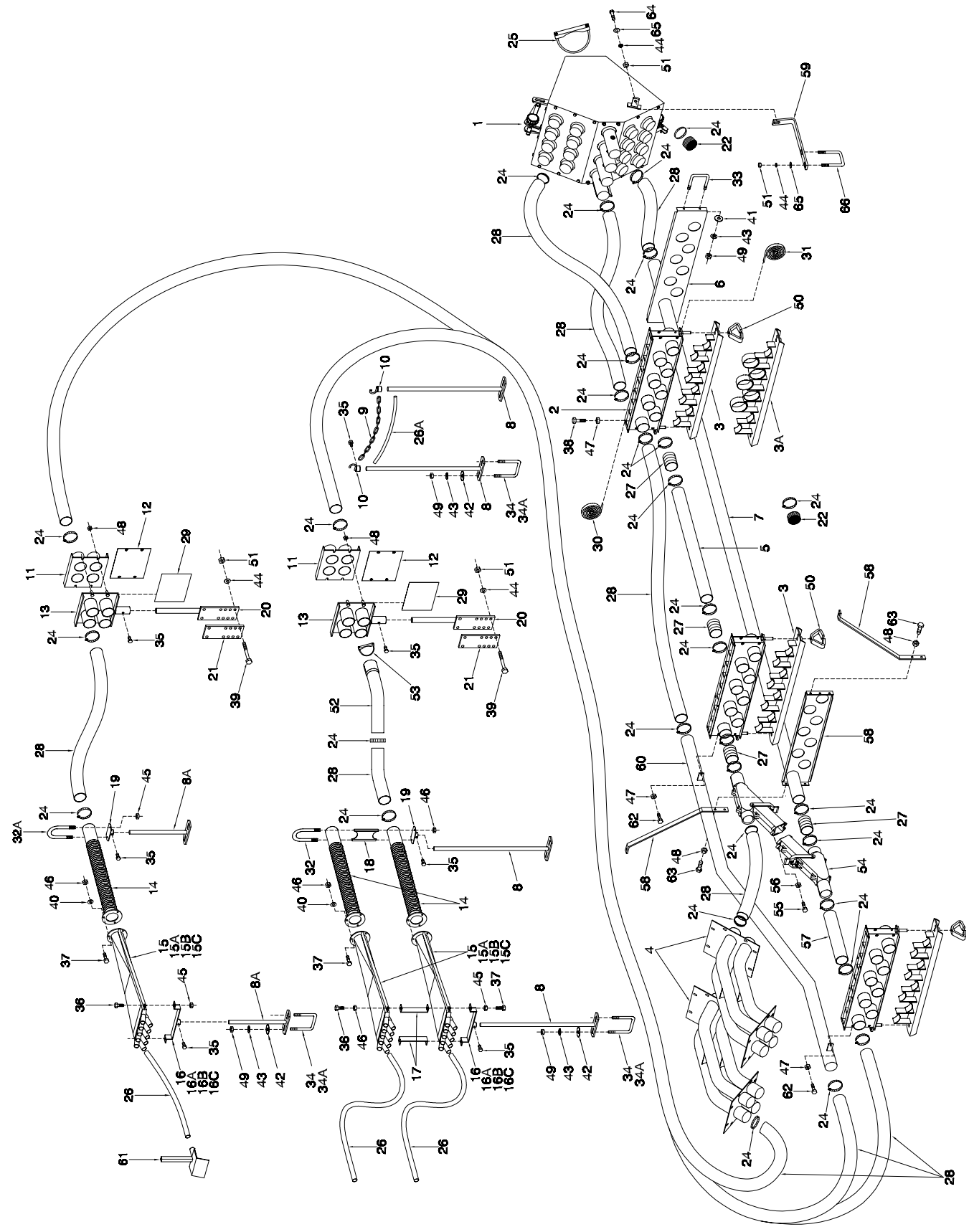

Distribution - Broadcast 7252 Front Tank Tow Between - 4 & 5 Primaries

Item	Part No.	Description	No: Used	
			31-40 Runs	41-50 Runs
1	N32440	Plenum Assembly - Broadcast	1	1
2	N19690	Collector - 8 Outlet	3	3
3	N19693	Cover - Cleanout - 8 Outlet	3	3
3A	N33159	Cover - Cleanout - 3-5 Primary Broadcast	1	1
4	N27450	Pipe Housing - Dual Shoot	2	2
5	N31537	Tube - Primary - 57	4	5
6	N27872	Mount Plate - Dual Between	1	1
7	N31539	Tube - Primary - 87	4	5
8	N19531	Support - Bottom - Rod 24	10	12
8A	N15105	Support - Bottom - Rod 12	4	6
9	N19448	Chain - 80 Link	1	1
10	N19717	Hook - Chain	2	2
11	N19398	Coupler - Hose - Tank	3	4
12	N19573	Blank Off Plate	6	8
13	N19395	Coupler - Hose - Seeder	3	4
14	N15135	Pipe - Corr Diff - Divider Head	10	13
15	N31190	Divider Assembly - 10 Outlet	As Req	As Req
15A	N31189	Divider Assembly - 9 Outlet	As Req	As Req
15B	N31188	Divider Assembly - 8 Outlet	As Req	As Req
15C	N31187	Divider Assembly - 7 Outlet	As Req	As Req
16	N19406	Support - 10 Outlet	As Req	As Req
16A	N15595	Support - 9 Outlet	As Req	As Req
16B	N15107	Support - 8 Outlet	As Req	As Req
16C	N15594	Support - 7 Outlet	As Req	As Req
17	N16689	Bracket Front - Dual Shoot Heads	8	10
18	N16507	Spacer - Rear - Dual Shoot Heads	4	5
19	N15102	Support - Rear	6	8
20	N19575	Base - Hose Coupler - Straight	3	4
21	N19409	Plate - Mount	3	4
22	N11907	Plastic Cap - Short - 2 1/2 Dia	40	30
24	N11905	Hose Clamp - 2 1/2 Dia	136	150
25	N15930	U-Clamp - 6 Dia Heavy Duty Flat	1	1
26	R480034	Hose - .929 ID x 1.169 OD/ft (75 ft roll)	800 ft	1050 ft
26A	R480034	Hose - .929 ID x 1.169 OD/ft (75 ft roll)	1.5 ft	1.5 ft
27	N19428	Hose - 2.52 ID x 2.77 OD x 5 Lg	16	20
28	R480055	Hose - 2 1/2 ID/ft Goodyear (100 ft rolls)	275 ft	350 ft
29	N19030	Seal - 1/16 x 6 1/2 x 6 1/2 (Bulk/ft)	3	4
30	N15716	Seal - 1/4 x 1 (Bulk/ft)	12.5 ft	12.5 ft
31	N19449	Seal - 3/8 x 1 (Bulk/ft)	15 ft	15 ft
32	N16504	U-Bolt - 1/4 x 2 9/16 x 9 1/2	4	5
32A	N15096	U-Bolt - 1/4 x 2 9/16 x 3 1/4	2	3
33	N27709	U-Bolt - 3/8 x 3 3/8 x 2 3/4	2	2
34	N15098	U-Bolt - 3/8 x 4 x 5	14	16
34A	N15097	U-Bolt - 3/8 x 2 x 5	10	12
35	N24396	Setscrew - 1/4 x 1/2 Lg	17	22
36	K-3830	Hex Bolt - 1/4 x 1/2 Lg	16	22
37	W-469	Hex Bolt - 1/4 x 3/4 Lg	38	49
38	F-1767	Hex Bolt - 5/16 x 3/4 Lg	24	24
39	W-496	Hex Bolt - 1/2 x 5 1/2 Lg	12	16
40	W-521	Lockwasher - 1/4	30	39
41	D-5489	Flatwasher - 3/8	4	4
42	D-5579	Flatwasher - 3/8	28	36
43	W-523	Lockwasher - 3/8	32	40

Distribution - Broadcast 7252 Front Tank Tow Between - 4 & 5 Primaries

Item	Part No.	Description	No: Used 31-40 Runs	No: Used 41-50 Runs
44	W-525	Lockwasher - 1/2	16	20
45	D-5277	Serrated Locknut - 1/4	32	42
46	W-525	Lockwasher - 1/2	16	20
47	D-5277	Serrated Locknut - 1/4	32	42
48	W-512	Hex Nut - 1/4	30	39
49	D-5278	Serrated Locknut - 5/16	28	30
50	D-5279	Serrated Locknut - 3/8	16	20
51	W-514	Hex Nut - 3/8	34	42
50	N27360	Wing Nut - 1/2	6	6
51	W-516	Hex Nut - 1/2	18	22
52	N27329	Tube - Primary - 45 degree Elbow	4	4
53	N15022	Clamp - Muffler - 2 1/2 Dia	4	4
54	N30068	Diverter Valve Assembly	8	10
55	W-470	Hex Bolt - 1/4 x 1 1/4 Lg	16	20
56	N22778	Locknut - 1/4 Nylon Insert	16	20
57	N29061	Hose - 2 1/2 Dia x 17 Lg	4	5
58	N28813	Strap - Mount Bracket	2	2
59	N32501	Strap - Fan Mount Bracket	2	2
60	N28121	Tube - Air Supply - Left - 73	1	2
60A	N28122	Tube - Air Supply - Right - 73	1	1
61	N19770	Deflector	As Req	As Req
62	W-471	Hex Bolt - 5/16 x 1 Lg	4	6
63	W-867	Hex Bolt - 3/8 x 3/4 Lg	4	4
64	S-776	Hex Bolt - 1/2 x 1 1/2 Lg	2	2
65	S-751	Flatwasher - 1/2	4	4
66	F-1677	U-Bolt - 1/2 x 3 x 4 1/8 Lg	2	2
	N19000	Decal - “AIRFLOW ARROW” (Not Shown)	6	6

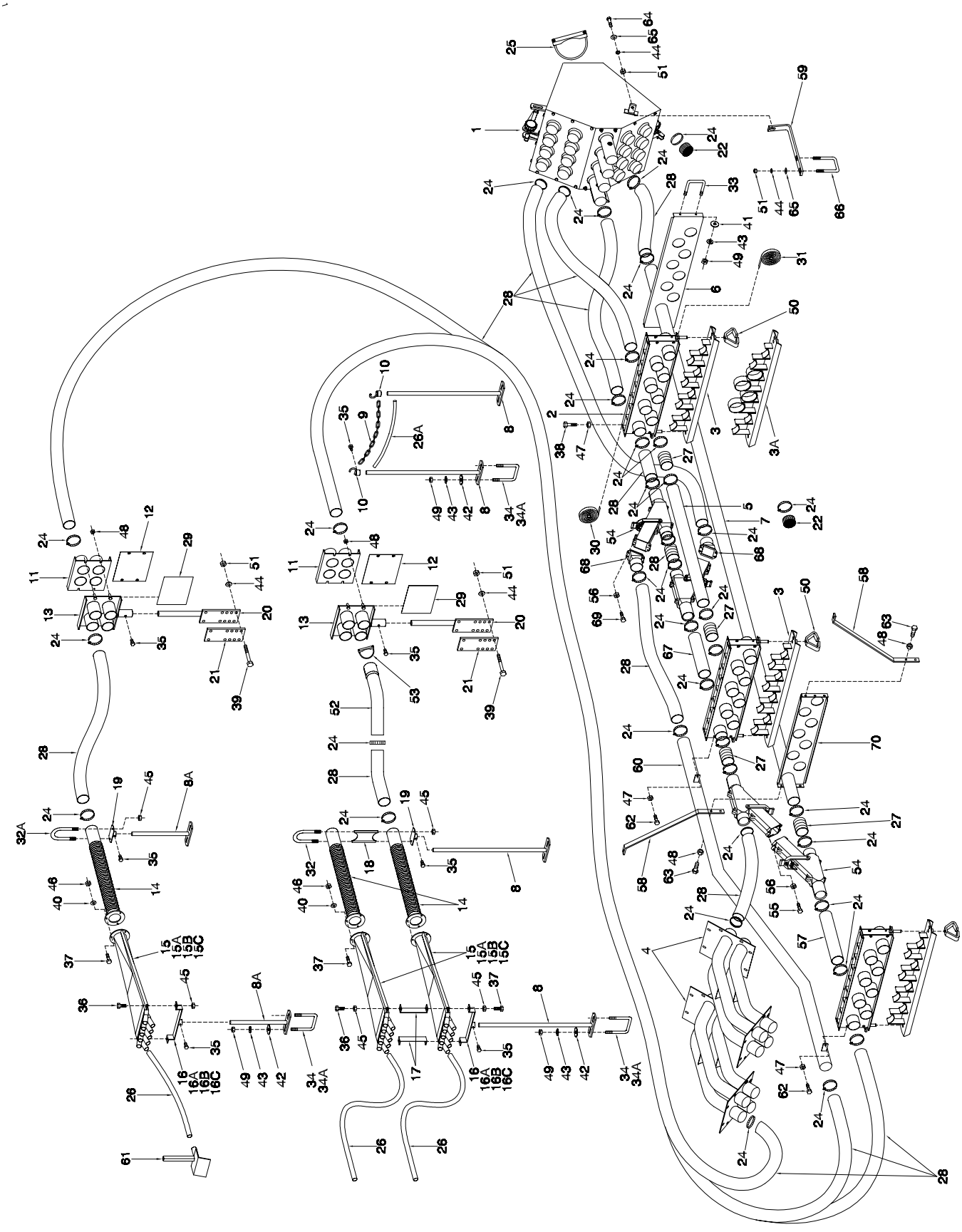

Distribution - Broadcast 7252 Front Tank Tow Between - 6 & 8 Primaries

Item	Part No.	Description	No: Used 31-40 Runs	No: Used 41-50 Runs
1	N32440	Plenum Assembly - Broadcast	1	1
2	N19690	Collector - 8 Outlet	3	3
3	N19693	Cover - Cleanout - 8 Outlet	3	3
3A	N33160	Cover - Cleanout - 6-8 Primary Broadcast	1	1
4	N27450	Pipe Housing - Dual Shoot	2	2
5	N31537	Tube - Primary - 57	6	8
6	N27872	Mount Plate - Dual Between	1	1
7	N31539	Tube - Primary - 87	6	8
8	N19531	Support - Bottom - Rod 24	14	18
8A	N15105	Support - Bottom - Rod 12	6	8
9	N19448	Chain - 80 Link	1	1
10	N19717	Hook - Chain	2	2
11	N19398	Coupler - Hose - Tank	4	5
12	N19573	Blank Off Plate	8	10
13	N19395	Coupler - Hose - Seeder	4	5
14	N15135	Pipe - Corr Diff - Divider Head	15	20
15	N31190	Divider Assembly - 10 Outlet	As Req	As Req
15A	N31189	Divider Assembly - 9 Outlet	As Req	As Req
15B	N31188	Divider Assembly - 8 Outlet	As Req	As Req
15C	N31187	Divider Assembly - 7 Outlet	As Req	As Req
16	N19406	Support - 10 Outlet	As Req	As Req
16A	N15595	Support - 9 Outlet	As Req	As Req
16B	N15107	Support - 8 Outlet	As Req	As Req
16C	N15594	Support - 7 Outlet	As Req	As Req
17	N16689	Bracket Front - Dual Shoot Heads	12	16
18	N16507	Spacer - Rear - Dual Shoot Heads	6	8
19	N15102	Support - Rear	9	12
20	N19575	Base - Hose Coupler - Straight	4	5
21	N19409	Plate - Mount	4	5
22	N11907	Plastic Cap - Short - 2 1/2 Dia	20	0
24	N11905	Hose Clamp - 2 1/2 Dia	164	198
25	N15930	U-Clamp - 6 Dia Heavy Duty Flat	1	1
26	R480034	Hose - .929 ID x 1.169 OD/ft (75 ft roll)	1200 ft	1600 ft
26A	R480034	Hose - .929 ID x 1.169 OD/ft (75 ft roll)	1.5 ft	1.5 ft
27	N19428	Hose - 2.52 ID x 2.77 OD x 5 Lg	24	32
28	R480055	Hose - 2 1/2 ID/ft Goodyear (100 ft rolls)	425 ft	575 ft
29	N19030	Seal - 1/16 x 6 1/2 x 6 1/2 (Bulk/ft)	4	5
30	N15716	Seal - 1/4 x 1 (Bulk/ft)	12.5 ft	12.5 ft
31	N19449	Seal - 3/8 x 1 (Bulk/ft)	15 ft	15 ft
32	N16504	U-Bolt - 1/4 x 2 9/16 x 9 1/2	6	8
32A	N15096	U-Bolt - 1/4 x 2 9/16 x 3 1/4	3	4
33	N27709	U-Bolt - 3/8 x 3 3/8 x 2 3/4	2	2
34	N15098	U-Bolt - 3/8 x 4 x 5	20	26
34A	N15097	U-Bolt - 3/8 x 2 x 5	12	16
35	N24396	Setscrew - 1/4 x 1/2 Lg	33	44
36	K-3830	Hex Bolt - 1/4 x 1/2 Lg	18	20
37	W-469	Hex Bolt - 1/4 x 3/4 Lg	57	88
38	F-1767	Hex Bolt - 5/16 x 3/4 Lg	24	24
39	W-496	Hex Bolt - 1/2 x 5 1/2 Lg	16	20
40	W-521	Lockwasher - 1/4	45	60
41	D-5489	Flatwasher - 3/8	4	4
42	D-5579	Flatwasher - 3/8	40	52

Distribution - Broadcast 7252 Front Tank Tow Between - 6 & 8 Primaries

Item	Part No.	Description	No: Used 31-40 Runs	No: Used 41-50 Runs
43	W-523	Lockwasher - 3/8	44	56
44	W-525	Lockwasher - 1/2	16	20
45	D-5277	Serrated Locknut - 1/4	48	64
46	W-512	Hex Nut - 1/4	45	60
47	D-5278	Serrated Locknut - 5/16	30	32
48	D-5279	Serrated Locknut - 3/8	20	24
49	W-514	Hex Nut - 3/8	50	62
50	N27360	Wing Nut - 1/2	6	6
51	W-516	Hex Nut - 1/2	22	26
52	N27329	Tube - Primary - 45 degree Elbow	8	8
53	N15022	Clamp - Muffler - 2 1/2 Dia	8	8
54	N30068	Diverter Valve Assembly	18	24
55	W-470	Hex Bolt - 1/4 x 1 1/4 Lg	24	32
56	N22778	Locknut - 1/4 Nylon Insert	48	64
57	N29061	Hose - 2 1/2 Dia x 17 Lg	6	8
58	N28813	Strap - Mount Bracket	2	2
59	N32501	Strap - Fan Mount Bracket	2	2
60	N28121	Tube - Air Supply - Left - 73	1	2
60A	N28122	Tube - Air Supply - Right - 73	2	2
61	N19770	Deflector	As Req	As Req
62	W-471	Hex Bolt - 5/16 x 1 Lg	6	8
63	W-867	Hex Bolt - 3/8 x 3/4 Lg	4	4
64	S-776	Hex Bolt - 1/2 x 1 1/2 Lg	2	2
65	S-751	Flatwasher - 1/2	4	4
66	F-1677	U-Bolt - 1/2 x 3 x 4 1/8 Lg	2	2
67	N29062	Hose - 2 1/2 Dia x 29 Lg	3	4
68	N32394	Adaptor - Angled	6	8
69	W-1552	Hex Bolt - 1/4 x 1 Lg	24	32
70	N28814	Mount Plate - Dual Shoot	1	1
	N19000	Decal - “AIRFLOW ARROW” (Not Shown)	6	6

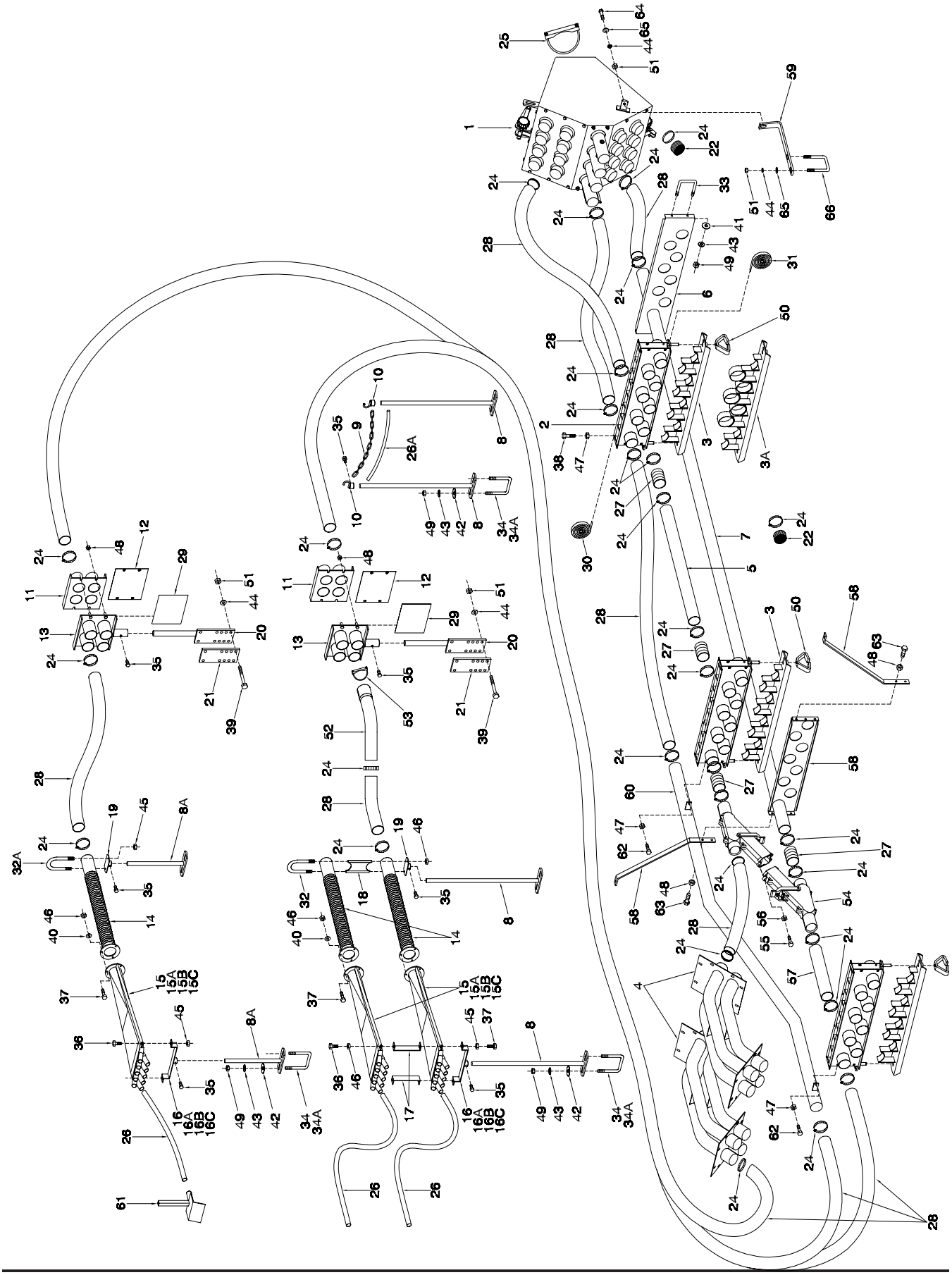

Distribution - Broadcast 7252 Front Tank Tow Behind - 4 & 5 Primaries

Item	Part No.	Description	No: Used	
			31-40 Runs	41-50 Runs
1	N32440	Plenum Assembly - Broadcast	1	1
2	N19690	Collector - 8 Outlet	3	3
3	N19693	Cover - Cleanout - 8 Outlet	3	3
3A	N33159	Cover - Cleanout - 3-5 Primary Broadcast	1	1
4	N27450	Pipe Housing - Dual Shoot	2	2
5	N31536	Tube - Primary - 47 29/32	6	8
6	N31537	Tube - Primary - 57	4	5
7	N31538	Tube - Primary - 139 3/16	4	5
8	N32396	Mount Plate - Primary Tube - Broadcast	1	1
9	N19531	Support - Bottom - Rod 24	10	12
9A	N15105	Support - Bottom - Rod 12	4	6
10	N19448	Chain - 80 Link	1	1
11	N19717	Hook - Chain	2	2
12	N27719	Coupler - Hose - Tank - Dual	2	3
12A	N19398	Coupler - Hose - Tank - Single	1	1
13	N27721	Cover Plate - Coupler - Dual	4	6
13A	N19573	Cover Plate - Coupler - Single	2	2
14	N28811	Coupler - Hose - Seeder - Dual	2	3
14A	N19395	Coupler - Hose - Seeder - Single	1	1
15	N15135	Pipe - Corr Diff - Divider Head	10	13
16	N31190	Divider Assembly - 10 Outlet	As Req	As Req
16A	N31189	Divider Assembly - 9 Outlet	As Req	As Req
16B	N31188	Divider Assembly - 8 Outlet	As Req	As Req
16C	N31187	Divider Assembly - 7 Outlet	As Req	As Req
17	N19406	Support - 10 Outlet	As Req	As Req
17A	N15595	Support - 9 Outlet	As Req	As Req
17B	N15107	Support - 8 Outlet	As Req	As Req
17C	N15594	Support - 7 Outlet	As Req	As Req
18	N16689	Bracket Front - Dual Shoot Heads	8	10
19	N16507	Spacer - Rear - Dual Shoot Heads	4	5
20	N15102	Support - Rear	6	8
21	N19410	Base - Hose Coupler	3	4
22	N19409	Plate - Mount	3	4
23	N11907	Plastic Cap - Short - 2 1/2 Dia	38	32
25	N11905	Hose Clamp - 2 1/2 Dia	144	160
26	N15930	U-Clamp - 6 Dia Heavy Duty Flat	1	1
27	R480034	Hose - .929 ID x 1.169 OD/ft (75 ft roll)	800 ft	1050 ft
27A	R480034	Hose - .929 ID x 1.169 OD/ft (75 ft roll)	1.5 ft	1.5 ft
28	N19428	Hose - 2.52 ID x 2.77 OD x 5 Lg	22	28
29	R480055	Hose - 2 1/2 ID/ft Goodyear (100 ft rolls)	275 ft	350 ft
30	N28302	Seal - 1/16 x 8 x 10 (Bulk/ft)	2	3
30A	N19030	Seal - 1/16 x 6 1/2 x 6 1/2 (Bulk/ft)	1	1
31	N15716	Seal - 1/4 x 1 (Bulk/ft)	12.5 ft	12.5 ft
32	N19449	Seal - 3/8 x 1 (Bulk/ft)	15 ft	15 ft
33	N16504	U-Bolt - 1/4 x 2 9/16 x 9 1/2	4	5
33A	N15096	U-Bolt - 1/4 x 2 9/16 x 3 1/4	2	3
34	N15098	U-Bolt - 3/8 x 4 x 5	14	16
34A	N15097	U-Bolt - 3/8 x 2 x 5	10	12
35	N24396	Setscrew - 1/4 x 1/2 Lg	17	22
36	K-3830	Hex Bolt - 1/4 x 1/2 Lg	16	22
37	W-469	Hex Bolt - 1/4 x 3/4 Lg	38	49
38	F-1767	Hex Bolt - 5/16 x 3/4 Lg	24	24
39	W-475	Hex Bolt - 3/8 x 1 Lg	2	2

Distribution - Broadcast 7252 Front Tank Tow Behind - 4 & 5 Primaries

Item	Part No.	Description	No: Used 31-40 Runs	No: Used 41-50 Runs
40	W-496	Hex Bolt - 1/2 x 5 1/2 Lg	12	16
41	W-521	Lockwasher - 1/4	30	39
42	D-5579	Flatwasher - 3/8	28	36
43	W-523	Lockwasher - 3/8	30	38
44	W-525	Lockwasher - 1/2	12	16
45	D-5277	Serrated Locknut - 1/4	32	42
46	W-512	Hex Nut - 1/4	30	39
47	D-5278	Serrated Locknut - 5/16	28	30
48	D-5279	Serrated Locknut - 3/8	16	20
49	W-514	Hex Nut - 3/8	30	38
50	N27360	Wing Nut - 1/2	6	6
51	W-516	Hex Nut - 1/2	14	18
52	N27329	Tube - Primary - 45 degree Elbow	4	4
53	N15022	Clamp - Muffler - 2 1/2 Dia	4	4
54	N30068	Diverter Valve Assembly	8	10
55	N28813	Strap - Mount Bracket	2	2
56	N28814	Mount Plate - Dual Shoot	1	1
57	W-470	Hex Bolt - 1/4 x 1 1/4 Lg	16	20
58	W-867	Hex Bolt - 3/8 x 3/4 Lg	4	4
59	N22778	Locknut - 1/4 Nylon Insert	16	20
60	N29061	Hose - 2 1/2 Dia x 17 Lg	4	5
61	N28121	Tube - Air Supply - Left - 73	1	2
61A	N28122	Tube - Air Supply - Right - 73	1	1
62	W-471	Hex Bolt - 5/16 x 1 Lg	4	6
63	N19770	Deflector	As Req	As Req
64	S-776	Hex Bolt - 1/2 x 1 1/2 Lg	2	2
65	S-751	Flatwasher - 1/2	4	4
	N19000	Decal - “AIRFLOW ARROW” (Not Shown)	6	6

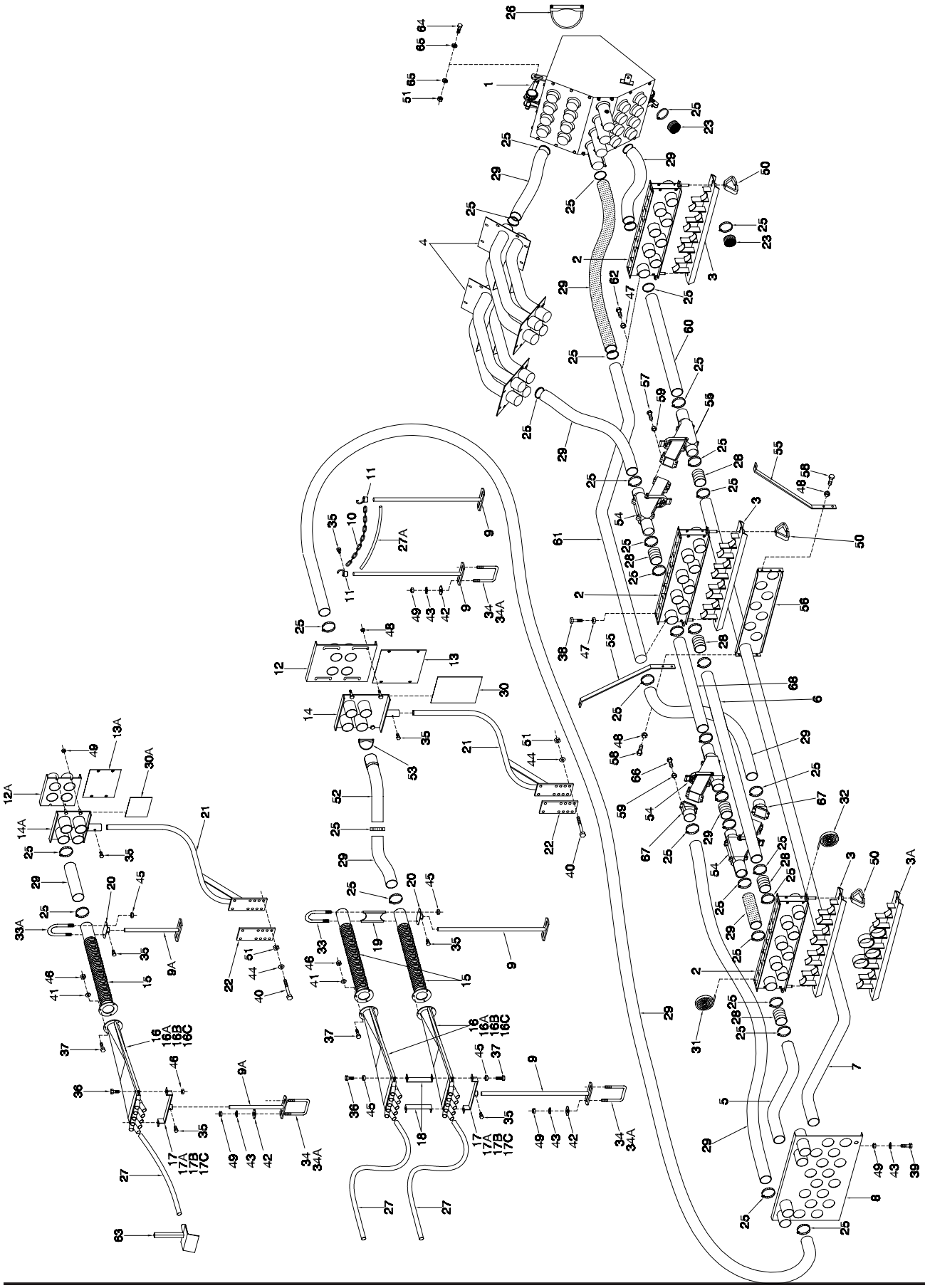

Distribution - Broadcast 7252 Front Tank Tow Behind - 6 & 8 Primaries

Item	Part No.	Description	No: Used 31-40 Runs	No: Used 41-50 Runs
1	N32440	Plenum Assembly - Broadcast	1	1
2	N19690	Collector - 8 Outlet	3	3
3	N19693	Cover - Cleanout - 8 Outlet	3	3
3A	N33160	Cover - Cleanout - 6-8 Primary Broadcast	1	1
4	N27450	Pipe Housing - Dual Shoot	2	2
5	N31536	Tube - Primary - 47 29/32	6	8
6	N31537	Tube - Primary - 57	6	8
7	N31538	Tube - Primary - 139 3/16	6	8
8	N32396	Mount Plate - Primary Tube - Broadcast	1	1
9	N19531	Support - Bottom - Rod 24	14	18
9A	N15105	Support - Bottom - Rod 12	6	8
10	N19448	Chain - 80 Link	1	1
11	N19717	Hook - Chain	2	2
12	N27719	Coupler - Hose - Tank - Dual	3	4
12A	N19398	Coupler - Hose - Tank - Single	1	1
13	N27721	Cover Plate - Coupler - Dual	6	8
13A	N19573	Cover Plate - Coupler - Single	2	2
14	N28811	Coupler - Hose - Seeder - Dual	3	4
14A	N19395	Coupler - Hose - Seeder - Single	1	1
15	N15135	Pipe - Corr Diff - Divider Head	15	20
16	N31190	Divider Assembly - 10 Outlet	As Req	As Req
16A	N31189	Divider Assembly - 9 Outlet	As Req	As Req
16B	N31188	Divider Assembly - 8 Outlet	As Req	As Req
16C	N31187	Divider Assembly - 7 Outlet	As Req	As Req
17	N19406	Support - 10 Outlet	As Req	As Req
17A	N15595	Support - 9 Outlet	As Req	As Req
17B	N15107	Support - 8 Outlet	As Req	As Req
17C	N15594	Support - 7 Outlet	As Req	As Req
18	N16689	Bracket Front - Dual Shoot Heads	12	16
19	N16507	Spacer - Rear - Dual Shoot Heads	6	8
20	N15102	Support - Rear	9	12
21	N19410	Base - Hose Coupler	4	5
22	N19409	Plate - Mount	4	5
23	N11907	Plastic Cap - Short - 2 1/2 Dia	25	0
25	N11905	Hose Clamp - 2 1/2 Dia	176	208
26	N15930	U-Clamp - 6 Dia Heavy Duty Flat	1	1
27	R480034	Hose - .929 ID x 1.169 OD/ft (75 ft roll)	1200 ft	1600 ft
27A	R480034	Hose - .929 ID x 1.169 OD/ft (75 ft roll)	1.5 ft	1.5 ft
28	N19428	Hose - 2.52 ID x 2.77 OD x 5 Lg	24	32
29	R480055	Hose - 2 1/2 ID/ft Goodyear (100 ft rolls)	425 ft	575 ft
30	N28302	Seal - 1/16 x 8 x 10 (Bulk/ft)	3	4
30A	N19030	Seal - 1/16 x 6 1/2 x 6 1/2 (Bulk/ft)	1	1
31	N15716	Seal - 1/4 x 1 (Bulk/ft)	12.5 ft	12.5 ft
32	N19449	Seal - 3/8 x 1 (Bulk/ft)	15 ft	15 ft
33	N16504	U-Bolt - 1/4 x 2 9/16 x 9 1/2	6	8
33A	N15096	U-Bolt - 1/4 x 2 9/16 x 3 1/4	3	4
34	N15098	U-Bolt - 3/8 x 4 x 5	20	26
34A	N15097	U-Bolt - 3/8 x 2 x 5	12	16
35	N24396	Setscrew - 1/4 x 1/2 Lg	33	44
36	K-3830	Hex Bolt - 1/4 x 1/2 Lg	18	20
37	W-469	Hex Bolt - 1/4 x 3/4 Lg	57	88
38	F-1767	Hex Bolt - 5/16 x 3/4 Lg	24	24

Distribution - Broadcast 7252 Front Tank Tow Behind - 6 & 8 Primaries

Item	Part No.	Description	No: Used 31-40 Runs	No: Used 41-50 Runs
39	W-475	Hex Bolt - 3/8 x 1 Lg	2	2
40	S-1198	Flatwasher - 1/4	12	16
41	W-521	Lockwasher - 1/4	45	60
42	D-5579	Flatwasher - 3/8	44	56
43	W-523	Lockwasher - 3/8	42	54
44	W-525	Lockwasher - 1/2	16	20
45	D-5277	Serrated Locknut - 1/4	48	64
46	W-512	Hex Nut - 1/4	45	60
47	D-5278	Serrated Locknut - 5/16	30	32
48	D-5279	Serrated Locknut - 3/8	20	24
49	W-514	Hex Nut - 3/8	42	54
50	N27360	Wing Nut - 1/2	6	6
51	W-516	Hex Nut - 1/2	18	22
52	N27329	Tube - Primary - 45 degree Elbow	8	8
53	N15022	Clamp - Muffler - 2 1/2 Dia	8	8
54	N30068	Diverter Valve Assembly	18	24
55	N28813	Strap - Mount Bracket	2	2
56	N28814	Mount Plate - Dual Shoot	1	1
57	W-470	Hex Bolt - 1/4 x 1 1/4 Lg	24	32
58	W-867	Hex Bolt - 3/8 x 3/4 Lg	4	4
59	N22778	Locknut - 1/4 Nylon Insert	48	64
60	N29061	Hose - 2 1/2 Dia x 17 Lg	6	8
61	N28121	Tube - Air Supply - Left - 73	2	2
61A	N28122	Tube - Air Supply - Right - 73	1	2
62	W-471	Hex Bolt - 5/16 x 1 Lg	6	8
63	N19770	Deflector	As Req	As Req
64	S-776	Hex Bolt - 1/2 x 1 1/2 Lg	2	2
65	S-751	Flatwasher - 1/2	4	4
66	W-1552	Hex Bolt - 1/4 x 1 Lg	24	32
67	N32394	Adaptor - Angled	6	8
68	N29062	Hose - 2 1/2 Dia x 29 Lg	3	4
	N19000	Decal - “AIRFLOW ARROW” (Not Shown)	6	6

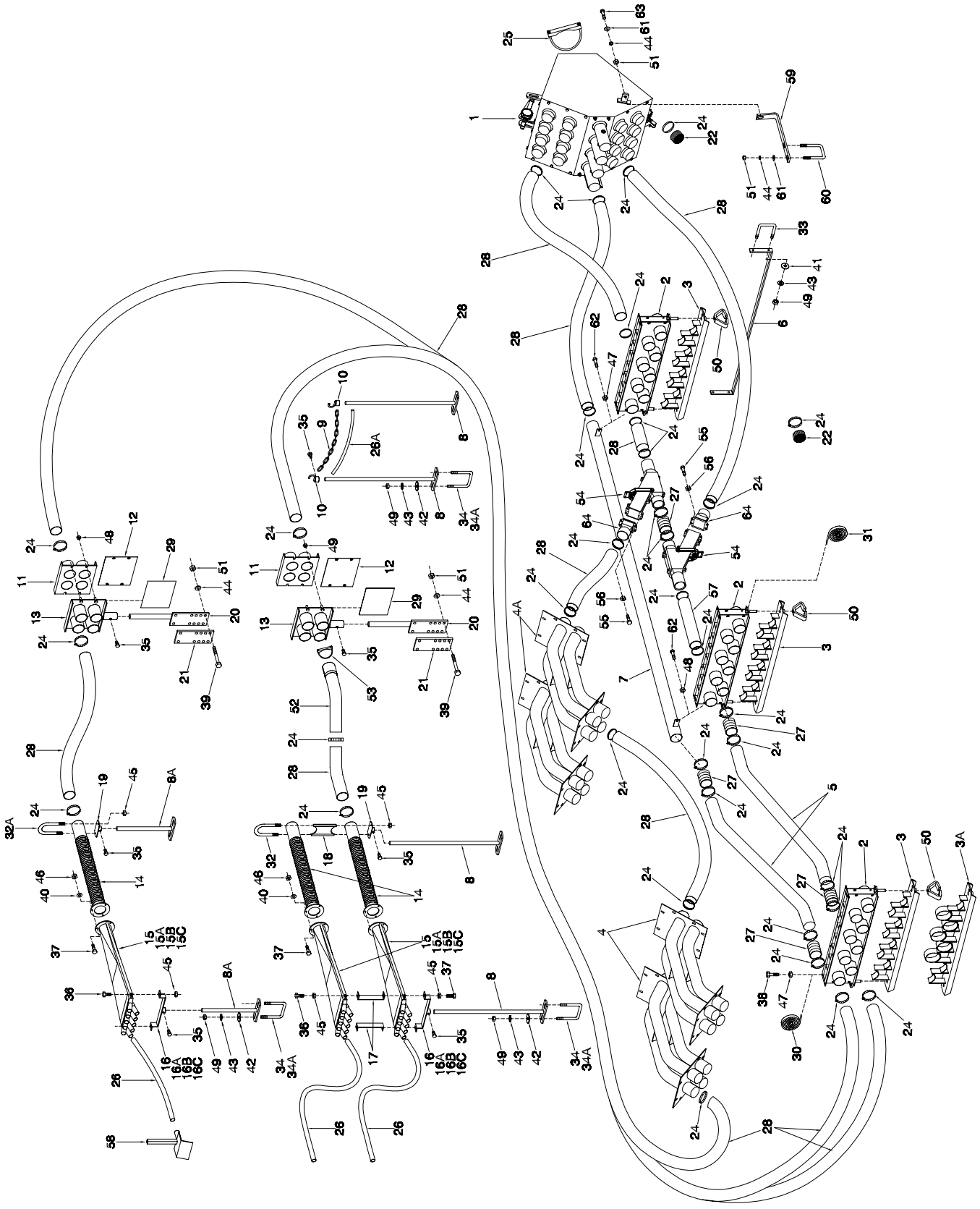

Distribution - Broadcast 7252 Rear Tank Tow Between - 4 & 5 Primaries

Item	Part No.	Description	No: Used	
			31-40 Runs	41-50 Runs
1	N32440	Plenum Assembly - Broadcast	1	1
2	N19690	Collector - 8 Outlet	3	3
3	N19693	Cover - Cleanout - 8 Outlet	3	3
3A	N33159	Cover - Cleanout - 3-5 Primary Broadcast	1	1
4	N27450	Pipe Housing - Dual Shoot	2	2
4A	N32045	Pipe Housing - Dual Shoot - Middle Tank	2	2
5	N27045	Tube - Primary - 43 3/4	6	8
6	N32049	Strap - Support	1	1
7	N32499	Tube	2	3
8	N19531	Support - Bottom - Rod 24	10	12
8A	N15105	Support - Bottom - Rod 12	4	6
9	N19448	Chain - 80 Link	1	1
10	N19717	Hook - Chain	2	2
11	N19398	Coupler - Hose - Tank	3	4
12	N19573	Blank Off Plate	6	8
13	N19395	Coupler - Hose - Seeder	3	4
14	N15135	Pipe - Corr Diff - Divider Head	10	13
15	N31190	Divider Assembly - 10 Outlet	As Req	As Req
15A	N31189	Divider Assembly - 9 Outlet	As Req	As Req
15B	N31188	Divider Assembly - 8 Outlet	As Req	As Req
15C	N31187	Divider Assembly - 7 Outlet	As Req	As Req
16	N19406	Support - 10 Outlet	As Req	As Req
16A	N15595	Support - 9 Outlet	As Req	As Req
16B	N15107	Support - 8 Outlet	As Req	As Req
16C	N15594	Support - 7 Outlet	As Req	As Req
17	N16689	Bracket Front - Dual Shoot Heads	8	10
18	N16507	Spacer - Rear - Dual Shoot Heads	4	5
19	N15102	Support - Rear	6	8
20	N19575	Base - Hose Coupler - Straight	3	4
21	N19409	Plate - Mount	3	4
22	N11907	Plastic Cap - Short - 2 1/2 Dia	40	30
24	N11905	Hose Clamp - 2 1/2 Dia	136	150
25	N15930	U-Clamp - 6 Dia Heavy Duty Flat	1	1
26	R480034	Hose - .929 ID x 1.169 OD/ft (75 ft roll)	800 ft	1050 ft
26A	R480034	Hose - .929 ID x 1.169 OD/ft (75 ft roll)	1.5 ft	1.5 ft
27	N19428	Hose - 2.52 ID x 2.77 OD x 5 Lg	16	21
28	R480055	Hose - 2 1/2 ID/ft Goodyear (100 ft rolls)	300 ft	400 ft
29	N19030	Seal - 1/16 x 6 1/2 x 6 1/2 (Bulk/ft)	3	4
30	N15716	Seal - 1/4 x 1 (Bulk/ft)	12.5 ft	12.5 ft
31	N19449	Seal - 3/8 x 1 (Bulk/ft)	15 ft	15 ft
32	N16504	U-Bolt - 1/4 x 2 9/16 x 9 1/2	4	5
32A	N15096	U-Bolt - 1/4 x 2 9/16 x 3 1/4	2	3
33	N27709	U-Bolt - 3/8 x 3 3/8 x 2 3/4	2	2
34	N15098	U-Bolt - 3/8 x 4 x 5	10	12
34A	N15097	U-Bolt - 3/8 x 2 x 5	8	10
35	N24396	Setscrew - 1/4 x 1/2 Lg	15	20
36	K-3830	Hex Bolt - 1/4 x 1/2 Lg	12	16
37	W-469	Hex Bolt - 1/4 x 3/4 Lg	38	49
38	F-1767	Hex Bolt - 5/16 x 3/4 Lg	24	24
39	W-496	Hex Bolt - 1/2 x 5 1/2 Lg	12	16
40	W-521	Lockwasher - 1/4	24	30
41	D-5489	Flatwasher - 3/8	4	4
42	D-5579	Flatwasher - 3/8	20	24

Distribution - Broadcast 7252 Rear Tank Tow Between - 4 & 5 Primaries

Item	Part No.	Description	No: Used 31-40 Runs	No: Used 41-50 Runs
43	W-523	Lockwasher - 3/8	24	28
44	W-525	Lockwasher - 1/2	18	22
45	D-5277	Serrated Locknut - 1/4	32	40
46	W-512	Hex Nut - 1/4	30	39
47	D-5278	Serrated Locknut - 5/16	24	24
48	D-5279	Serrated Locknut - 3/8	16	16
49	W-514	Hex Nut - 3/8	34	42
50	N27360	Wing Nut - 1/2	6	6
51	W-516	Hex Nut - 1/2	22	22
52	N27329	Tube - Primary - 45 degree Elbow	4	4
53	N15022	Clamp - Muffler - 2 1/2 Dia	4	4
54	N30068	Diverter Valve Assembly	8	10
55	W-471	Hex Bolt - 5/16 x 1 Lg	32	40
56	N22778	Locknut - 1/4 Nylon Insert	32	40
57	N29061	Hose - 2 1/2 Dia x 17 Lg	4	5
58	N19770	Deflector	As Req	As Req
59	N32501	Strap - Fan Mount Bracket	2	2
60	F-1677	U-Bolt - 1/2 x 3 x 4 1/8 Lg	2	2
61	S-751	Flatwasher - 1/2	4	4
62	W-471	Hex Bolt - 5/16 x 1 Lg	4	6
63	S-776	Hex Bolt - 1/2 x 1 1/2 Lg	2	2
64	N32750	Adaptor - Straight	8	10
	N19000	Decal - “AIRFLOW ARROW” (Not Shown)	6	6

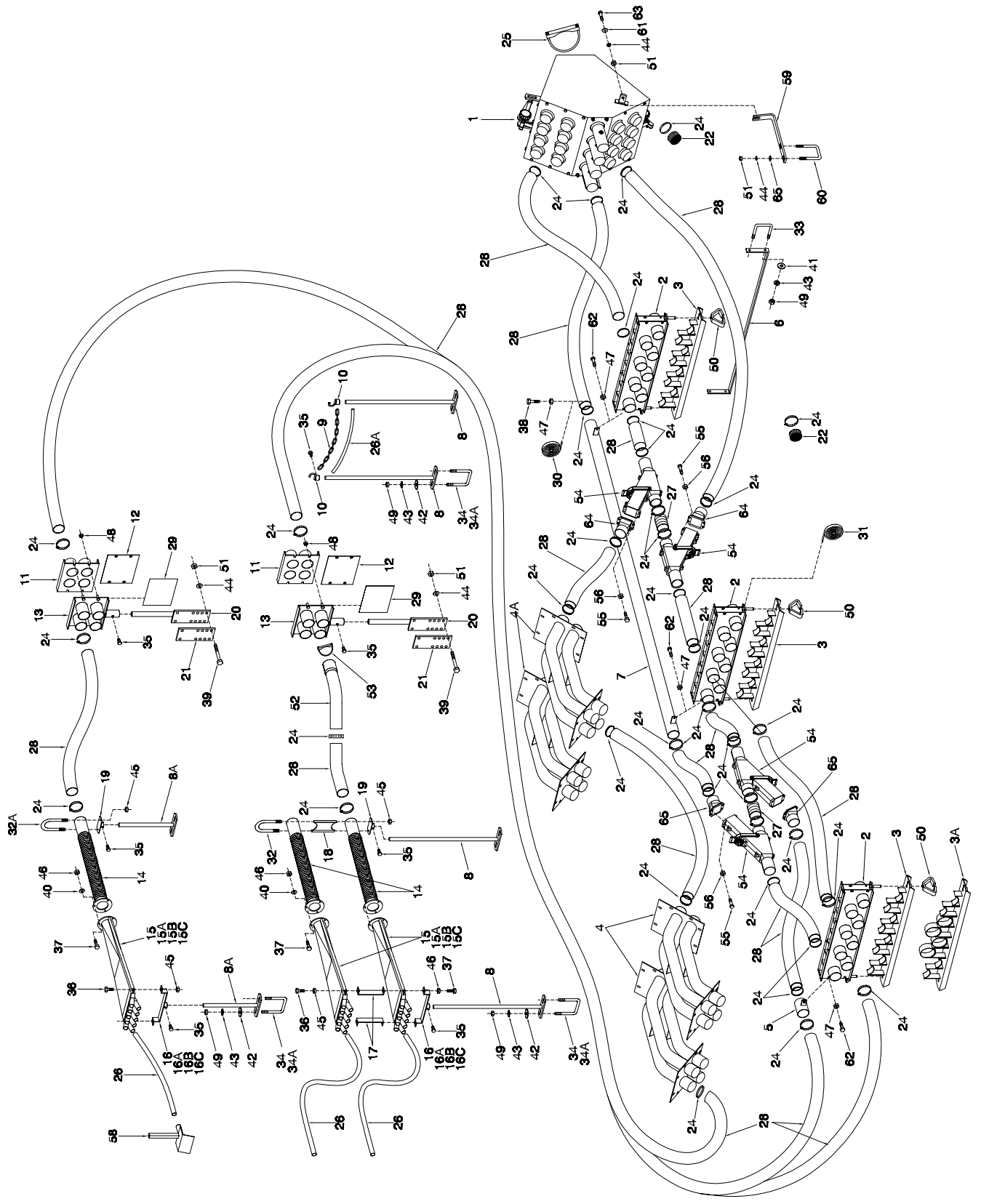

Distribution - Broadcast 7252 Rear Tank Tow Between - 6 & 8 Primaries

Item	Part No.	Description	No: Used 51-60 Runs	No: Used 71-80 Runs
1	N32440	Plenum Assembly - Broadcast	1	1
2	N19690	Collector - 8 Outlet	3	3
3	N19693	Cover - Cleanout - 8 Outlet	3	3
3A	N33160	Cover - Cleanout - 6-8 Primary Broadcast	1	1
4	N27450	Pipe Housing - Dual Shoot	2	2
4A	N32045	Pipe Housing - Dual Shoot - Middle Tank	2	2
5	N32048	Coupler - Pipe	2	2
6	N32049	Strap - Support	1	1
7	N32499	Tube	3	4
8	N19531	Support - Bottom - Rod 24	14	18
8A	N15105	Support - Bottom - Rod 12	6	8
9	N19448	Chain - 80 Link	1	1
10	N19717	Hook - Chain	2	2
11	N19398	Coupler - Hose - Tank	4	5
12	N19573	Blank Off Plate	8	10
13	N19395	Coupler - Hose - Seeder	4	5
14	N15135	Pipe - Corr Diff - Divider Head	15	20
15	N31190	Divider Assembly - 10 Outlet	As Req	As Req
15A	N31189	Divider Assembly - 9 Outlet	As Req	As Req
15B	N31188	Divider Assembly - 8 Outlet	As Req	As Req
15C	N31187	Divider Assembly - 7 Outlet	As Req	As Req
16	N19406	Support - 10 Outlet	As Req	As Req
16A	N15595	Support - 9 Outlet	As Req	As Req
16B	N15107	Support - 8 Outlet	As Req	As Req
16C	N15594	Support - 7 Outlet	As Req	As Req
17	N16689	Bracket Front - Dual Shoot Heads	12	16
18	N16507	Spacer - Rear - Dual Shoot Heads	6	8
19	N15102	Support - Rear	9	12
20	N19575	Base - Hose Coupler - Straight	4	5
21	N19409	Plate - Mount	4	5
22	N11907	Plastic Cap - Short - 2 1/2 Dia	40	30
24	N11905	Hose Clamp - 2 1/2 Dia	136	150
25	N15930	U-Clamp - 6 Dia Heavy Duty Flat	1	1
26	R480034	Hose - .929 ID x 1.169 OD/ft (75 ft roll)	1200 ft	1600 ft
26A	R480034	Hose - .929 ID x 1.169 OD/ft (75 ft roll)	1.5 ft	1.5 ft
27	N19428	Hose - 2.52 ID x 2.77 OD x 5 Lg	16	21
28	R480055	Hose - 2 1/2 ID/ft Goodyear (100 ft rolls)	475 ft	600 ft
29	N19030	Seal - 1/16 x 6 1/2 x 6 1/2 (Bulk/ft)	4	5
30	N15716	Seal - 1/4 x 1 (Bulk/ft)	12.5 ft	12.5 ft
31	N19449	Seal - 3/8 x 1 (Bulk/ft)	15 ft	15 ft
32	N16504	U-Bolt - 1/4 x 2 9/16 x 9 1/2	6	8
32A	N15096	U-Bolt - 1/4 x 2 9/16 x 3 1/4	3	4
33	N27709	U-Bolt - 3/8 x 3 3/8 x 2 3/4	2	2
34	N15098	U-Bolt - 3/8 x 4 x 5	16	20
34A	N15097	U-Bolt - 3/8 x 2 x 5	12	16
35	N24396	Setscrew - 1/4 x 1/2 Lg	33	44
36	K-3830	Hex Bolt - 1/4 x 1/2 Lg	18	20
37	W-469	Hex Bolt - 1/4 x 3/4 Lg	57	88
38	F-1767	Hex Bolt - 5/16 x 3/4 Lg	24	24
39	W-496	Hex Bolt - 1/2 x 5 1/2 Lg	16	20
40	W-521	Lockwasher - 1/4	45	60
41	D-5489	Flatwasher - 3/8	4	4

Distribution - Broadcast 7252 Rear Tank Tow Between - 6 & 8 Primaries

Item	Part No.	Description	No: Used 51-60 Runs	No: Used 71-80 Runs
42	D-5579	Flatwasher - 3/8	40	52
43	W-523	Lockwasher - 3/8	44	56
44	W-525	Lockwasher - 1/2	16	20
45	D-5277	Serrated Locknut - 1/4	48	64
46	W-512	Hex Nut - 1/4	45	60
47	D-5278	Serrated Locknut - 5/16	33	36
48	D-5279	Serrated Locknut - 3/8	16	20
49	W-514	Hex Nut - 3/8	50	62
50	N27360	Wing Nut - 1/2	6	6
51	W-516	Hex Nut - 1/2	22	26
52	N27329	Tube - Primary - 45 degree Elbow	8	8
53	N15022	Clamp - Muffler - 2 1/2 Dia	8	8
54	N30068	Diverter Valve Assembly	18	24
55	W-1552	Hex Bolt - 1/4 x 1 Lg	72	96
56	N22778	Locknut - 1/4 Nylon Insert	72	96
57	N29061	Hose - 2 1/2 Dia x 17 Lg	6	8
58	N19770	Deflector	As Req	As Req
59	N32501	Strap - Fan Mount Bracket	2	2
60	F-1677	U-Bolt - 1/2 x 3 x 4 1/8 Lg	2	2
61	S-751	Flatwasher - 1/2	4	4
62	W-471	Hex Bolt - 5/16 x 1 Lg	9	12
63	S-776	Hex Bolt - 1/2 x 1 1/2 Lg	2	2
64	N32750	Adaptor - Straight	12	16
65	N32394	Adaptor - Angled	6	8
	N19000	Decal - “AIRFLOW ARROW” (Not Shown)	6	6

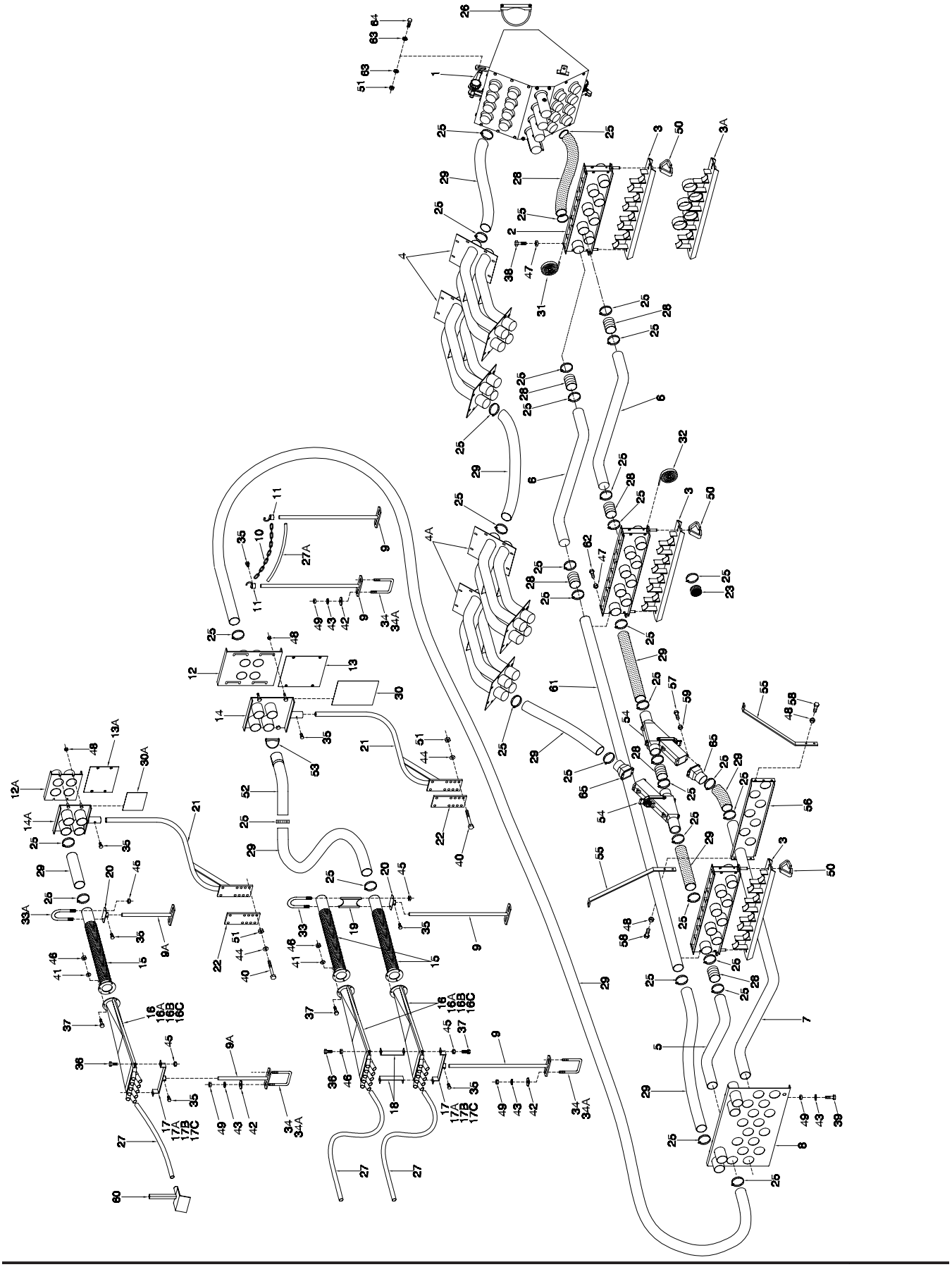

Distribution - Broadcast 7252 Rear Tank Tow Behind - 4 & 5 Primaries

Item	Part No.	Description	No: Used	
			31-41 Runs	41-50 Runs
1	N32440	Plenum Assembly - Broadcast	1	1
2	N19690	Collector - 8 Outlet	3	3
3	N19693	Cover - Cleanout - 8 Outlet	3	3
3A	N33159	Cover - Cleanout - 3-5 Primary Broadcast	1	1
4	N27450	Pipe Housing - Dual Shoot	2	2
4A	N32045	Pipe Housing - Dual Shoot - Middle Tank	2	2
5	N31536	Tube - Primary - 47 29/32	4	5
6	N27045	Tube - Primary - 43 3/4	6	8
7	N31538	Tube - Primary - 139 3/16	4	5
8	N32396	Mount Plate - Primary Tube - Broadcast	1	1
9	N19531	Support - Bottom - Rod 24	10	12
A	N15105	Support - Bottom - Rod 12	4	6
10	N19448	Chain - 80 Link	1	1
11	N19717	Hook - Chain	2	2
12	N27719	Coupler - Hose - Tank - Dual	2	3
12A	N19398	Coupler - Hose - Tank - Single	1	1
13	N27721	Cover Plate - Coupler - Dual	4	6
13A	N19573	Cover Plate - Coupler - Single	2	2
14	N28811	Coupler - Hose - Seeder - Dual	2	3
14A	N19395	Coupler - Hose - Seeder - Single	1	1
15	N15135	Pipe - Corr Diff - Divider Head	10	13
16	N31190	Divider Assembly - 10 Outlet	As Req	As Req
16A	N31189	Divider Assembly - 9 Outlet	As Req	As Req
16B	N31188	Divider Assembly - 8 Outlet	As Req	As Req
16C	N31187	Divider Assembly - 7 Outlet	As Req	As Req
17	N19406	Support - 10 Outlet	As Req	As Req
17A	N15595	Support - 9 Outlet	As Req	As Req
17B	N15107	Support - 8 Outlet	As Req	As Req
17C	N15594	Support - 7 Outlet	As Req	As Req
18	N16689	Bracket Front - Dual Shoot Heads	8	10
19	N16507	Spacer - Rear - Dual Shoot Heads	4	5
20	N15102	Support - Rear	6	8
21	N19410	Base - Hose Coupler	3	4
22	N19409	Plate - Mount	3	4
23	N11907	Plastic Cap - Short - 2 1/2 Dia	38	32
25	N11905	Hose Clamp - 2 1/2 Dia	144	160
26	N15930	U-Clamp - 6 Dia Heavy Duty Flat	1	1
27	R480034	Hose - .929 ID x 1.169 OD/ft (75 ft roll)	800 ft	1050 ft
27A	R480034	Hose - .929 ID x 1.169 OD/ft (75 ft roll)	1.5 ft	1.5 ft
28	N19428	Hose - 2.52 ID x 2.77 OD x 5 Lg	20	26
29	R480055	Hose - 2 1/2 ID/ft Goodyear (100 ft rolls)	300 ft	400 ft
30	N28302	Seal - 1/16 x 8 x 10 (Bulk/ft)	2	3
30A	N19030	Seal - 1/16 x 6 1/2 x 6 1/2 (Bulk/ft)	1	1
31	N15716	Seal - 1/4 x 1 (Bulk/ft)	12.5 ft	12.5 ft
32	N19449	Seal - 3/8 x 1 (Bulk/ft)	15 ft	15 ft
33	N16504	U-Bolt - 1/4 x 2 9/16 x 9 1/2	4	5
33A	N15096	U-Bolt - 1/4 x 2 9/16 x 3 1/4	2	3
34	N15098	U-Bolt - 3/8 x 4 x 5	14	18
34A	N15097	U-Bolt - 3/8 x 2 x 5	12	14
35	N24396	Setscrew - 1/4 x 1/2 Lg	17	22
36	K-3830	Hex Bolt - 1/4 x 1/2 Lg	12	16
37	W-469	Hex Bolt - 1/4 x 3/4 Lg	38	49
38	F-1767	Hex Bolt - 5/16 x 3/4 Lg	24	24

Distribution - Broadcast 7252 Rear Tank Tow Behind - 4 & 5 Primaries

Item	Part No.	Description	No: Used 31-40 Runs	No: Used 41-50 Runs
39	W-475	Hex Bolt - 3/8 x 1 Lg	2	2
40	W-496	Hex Bolt - 1/2 x 5 1/2 Lg	12	16
41	W-521	Lockwasher - 1/4	30	39
42	D-5579	Flatwasher - 3/8	28	36
43	W-523	Lockwasher - 3/8	30	38
44	W-525	Lockwasher - 1/2	12	16
46	D-5277	Serrated Locknut - 1/4	32	42
46	W-512	Hex Nut - 1/4	30	39
47	D-5278	Serrated Locknut - 5/16	28	30
48	D-5279	Serrated Locknut - 3/8	16	20
49	W-514	Hex Nut - 3/8	30	38
50	N27360	Wing Nut - 1/2	6	6
51	W-516	Hex Nut - 1/2	14	18
52	N27329	Tube - Primary - 45 degree Elbow	4	4
53	N15022	Clamp - Muffler - 2 1/2 Dia	4	4
54	N30068	Diverter Valve Assembly	8	10
55	N28813	Strap - Mount Bracket	2	2
56	N28814	Mount Plate - Dual Shoot	1	1
57	W-1552	Hex Bolt - 1/4 x 1 Lg	32	40
58	W-867	Hex Bolt - 3/8 x 3/4 Lg	4	4
59	N22778	Locknut - 1/4 Nylon Insert	32	40
60	N19770	Deflector	As Req	As Req
61	N32499	Tube - Air Supply	2	3
62	W-471	Hex Bolt - 5/16 x 1 Lg	4	5
63	S-751	Flatwasher - 1/2	4	4
64	S-776	Hex Bolt - 1/2 x 1 1/2 Lg	2	2
65	N32750	Adaptor - Straight	8	10
	N19000	Decal - “AIRFLOW ARROW” (Not Shown)	6	6

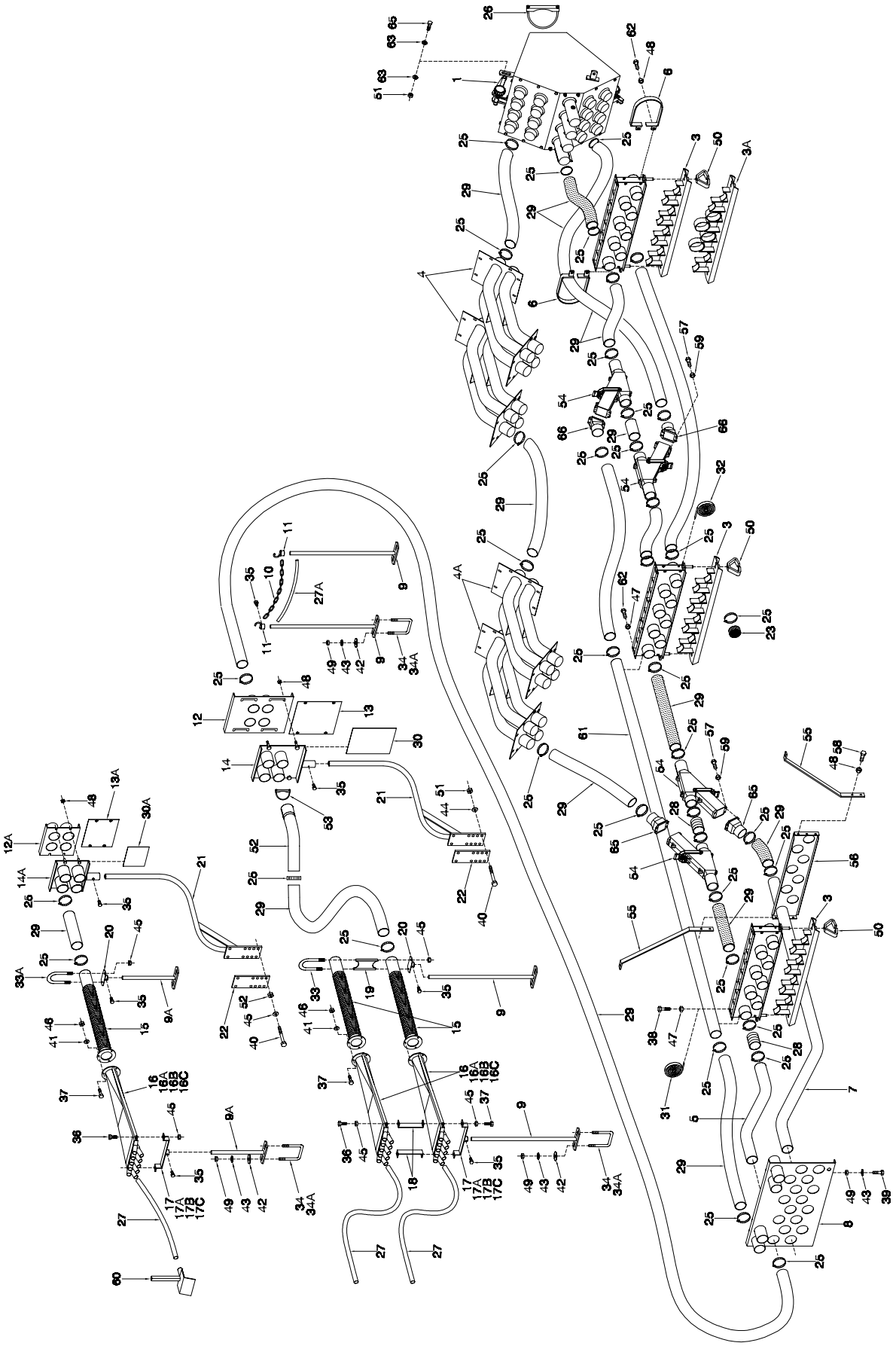

Distribution - Broadcast 7252 Rear Tank Tow Behind - 6 & 8 Primaries

Item	Part No.	Description	No: Used 51-60 Runs	No: Used 71-80 Runs
1	N32440	Plenum Assembly - Broadcast	1	1
2	N19690	Collector - 8 Outlet	3	3
3	N19693	Cover - Cleanout - 8 Outlet	3	3
3A	N33160	Cover - Cleanout - 6-8 Primary Broadcast	1	1
4	N27450	Pipe Housing - Dual Shoot	2	2
4A	N32045	Pipe Housing - Dual Shoot - Middle Tank	2	2
5	N31536	Tube - Primary - 47 29/32	6	8
6	N21746	Bracket - Hose	2	2
	N31538	Tube - Primary - 139 3/16	6	8
8	N32396	Mount Plate - Primary Tube - Broadcast	1	1
9	N19531	Support - Bottom - Rod 24	14	18
9A	N15105	Support - Bottom - Rod 12	6	8
10	N19448	Chain - 80 Link	1	1
11	N19717	Hook - Chain	2	2
12	N27719	Coupler - Hose - Tank - Dual	3	4
12A	N19398	Coupler - Hose - Tank - Single	1	1
13	N27721	Cover Plate - Coupler - Dual	6	8
13A	N19573	Cover Plate - Coupler - Single	2	2
14	N28811	Coupler - Hose - Seeder - Dual	3	4
14A	N19395	Coupler - Hose - Seeder - Single	1	1
15	N15135	Pipe - Corr Diff - Divider Head	15	20
16	N31190	Divider Assembly - 10 Outlet	As Req	As Req
16A	N31189	Divider Assembly - 9 Outlet	As Req	As Req
16B	N31188	Divider Assembly - 8 Outlet	As Req	As Req
16C	N31187	Divider Assembly - 7 Outlet	As Req	As Req
17	N19406	Support - 10 Outlet	As Req	As Req
17A	N15595	Support - 9 Outlet	As Req	As Req
17B	N15107	Support - 8 Outlet	As Req	As Req
17C	N15594	Support - 7 Outlet	As Req	As Req
18	N16689	Bracket Front - Dual Shoot Heads	12	16
19	N16507	Spacer - Rear - Dual Shoot Heads	6	8
20	N15102	Support - Rear	9	12
21	N19410	Base - Hose Coupler	4	5
22	N19409	Plate - Mount	4	5
23	N11907	Plastic Cap - Short - 2 1/2 Dia	25	0
25	N11905	Hose Clamp - 2 1/2 Dia	176	208
26	N15930	U-Clamp - 6 Dia Heavy Duty Flat	1	1
27	R480034	Hose - .929 ID x 1.169 OD/ft (75 ft roll)	1200 ft	1600 ft
27A	R480034	Hose - .929 ID x 1.169 OD/ft (75 ft roll)	1.5 ft	1.5 ft
28	N19428	Hose - 2.52 ID x 2.77 OD x 5 Lg	12	16
29	R480055	Hose - 2 1/2 ID/ft Goodyear (100 ft rolls)	475 ft	600 ft
30	N28302	Seal - 1/16 x 8 x 10 (Bulk/ft)	3	4
30A	N19030	Seal - 1/16 x 6 1/2 x 6 1/2 (Bulk/ft)	1	1
31	N15716	Seal - 1/4 x 1 (Bulk/ft)	12.5 ft	12.5 ft
32	N19449	Seal - 3/8 x 1 (Bulk/ft)	15 ft	15 ft
33	N16504	U-Bolt - 1/4 x 2 9/16 x 9 1/2	6	8
33A	N15096	U-Bolt - 1/4 x 2 9/16 x 3 1/4	3	4
34	N15098	U-Bolt - 3/8 x 4 x 5	20	26
34A	N15097	U-Bolt - 3/8 x 2 x 5	12	16
35	N24396	Setscrew - 1/4 x 1/2 Lg	24	31
36	K-3830	Hex Bolt - 1/4 x 1/2 Lg	18	24
37	W-469	Hex Bolt - 1/4 x 3/4 Lg	57	76
38	F-1767	Hex Bolt - 5/16 x 3/4 Lg	24	24

Distribution - Broadcast 7252 Rear Tank Tow Behind - 6 & 8 Primaries

Item	Part No.	Description	No: Used 51-60 Runs	No: Used 71-80 Runs
39	W-475	Hex Bolt - 3/8 x 1 Lg	2	2
40	W-496	Hex Bolt - 1/2 x 5 1/2 Lg	16	20
41	W-521	Lockwasher - 1/4	45	60
42	D-5579	Flatwasher - 3/8	40	52
43	W-523	Lockwasher - 3/8	42	54
44	W-525	Lockwasher - 1/2	16	20
45	D-5277	Serrated Locknut - 1/4	48	64
46	W-512	Hex Nut - 1/4	45	60
47	D-5278	Serrated Locknut - 5/16	34	36
48	D-5279	Serrated Locknut - 3/8	20	24
49	W-514	Hex Nut - 3/8	42	54
50	N27360	Wing Nut - 1/2	6	6
51	W-516	Hex Nut - 1/2	18	22
52	N27329	Tube - Primary - 45 degree Elbow	8	8
53	N15022	Clamp - Muffler - 2 1/2 Dia	8	8
54	N30068	Diverter Valve Assembly	18	24
55	N28813	Strap - Mount Bracket	2	2
56	N28814	Mount Plate - Dual Shoot	1	1
57	W-1552	Hex Bolt - 1/4 x 1 Lg	72	96
58	W-867	Hex Bolt - 3/8 x 3/4 Lg	4	4
59	N22778	Locknut - 1/4 Nylon Insert	72	96
60	N19770	Deflector	As Req	As Req
61	N32499	Tube - Air Supply	3	4
62	W-471	Hex Bolt - 5/16 x 1 Lg	4	5
63	S-751	Flatwasher - 1/2	4	4
64	S-776	Hex Bolt - 1/2 x 1 1/2 Lg	2	2
65	N32750	Adaptor - Straight	12	16
66	N32394	Adaptor - Angled	6	8
	N19000	Decal - “AIRFLOW ARROW” (Not Shown)	6	6

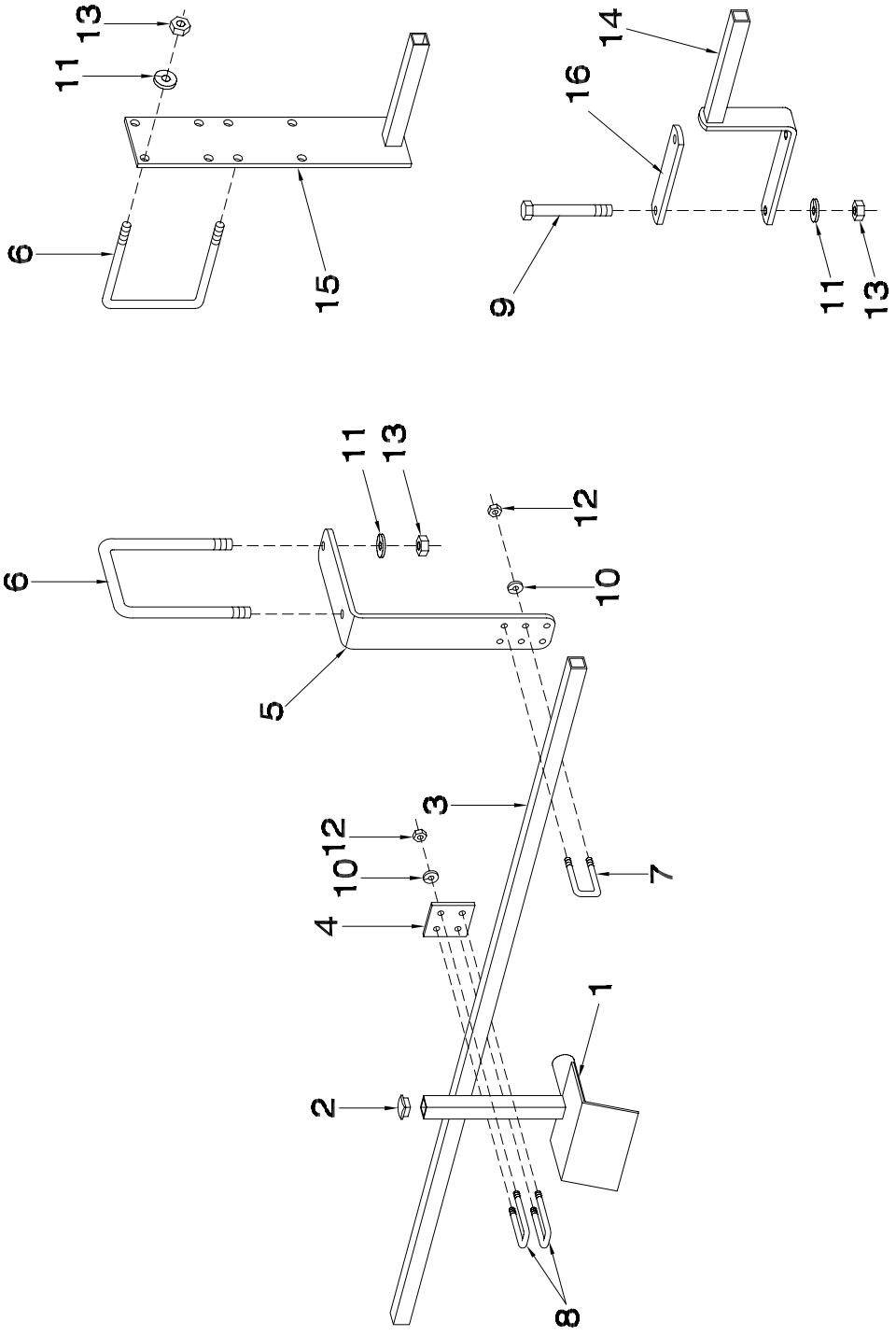
13
11
6
15
14
16
9
11
13
11
13
12
6
10
5
3
12
10
7
4
1
2
8

Distribution - Broadcast 7252 Deflector Mounts

Item	Part No.	Description	Qty
1	N19770	Deflector	As Req'd
2	N21057	Square Insert Glide	As Req'd
3	N21080	Bar Support - 3/4 Sq x 176	As Req'd
4	N21060	Clamp - Plate	As Req'd
5	N32967	Bracket - Deflector	As Req'd
6	N15098	U-Bolt - 3/8 x 4 x 5	As Req'd
7	N21055	U-Bolt - 1/4 x 3/4 x 1 3/8	As Req'd
8	N21061	U-Bolt - 1/4 x 3/4 x 2	As Req'd
9	C-3918	Hex Bolt - 3/8 x 5 Lg	As Req'd
10	W-521	Lockwasher - 1/4	As Req'd
11	W-523	Lockwasher - 3/8	As Req'd
12	W-512	Hex Nut - 1/4	As Req'd
13	W-514	Hex Nut - 3/8	As Req'd
14	N24309	Deflector Mount	As Req'd
15	N32968	Deflector Mount	As Req'd
16	N24311	Clamp Strap	As Req'd

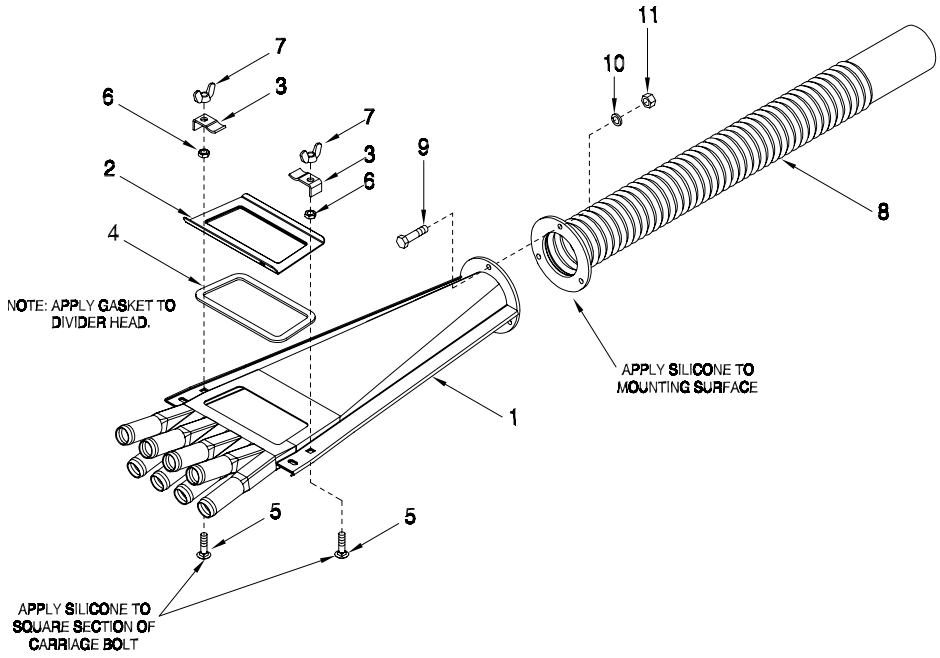

Standard Head Combinations

Head Size	Number of Secondary Outlets																															
	3 Primaries										4 Primaries										5 Primaries											
	21	22	23	24	25	26	27	28	29	30	31	32	33	34	35	36	37	38	39	40	41	42	43	44	45	46	47	48	49	50
7 Outlet	3	2	1	*	*	*	*	*	*	*	1	*	*	*	*	*	*	*	*	*	*	*	*	*	*	*	*	*	*	*	*	*
8 Outlet	*	1	2	3	2	1	*	*	*	*	3	4	3	2	1	*	*	*	*	*	4	3	2	1	*	*	*	*	*	*	*	*
9 Outlet	*	*	*	*	1	2	3	2	1	*	*	*	1	2	3	4	3	2	1	*	1	2	3	4	5	4	3	2	1	*		
10 Outlet	*	*	*	*	*	*	*	1	2	3	*	*	*	*	*	*	1	2	3	4	*	*	*	*	*	1	2	3	4	5		

Head Size	Number of Secondary Outlets																															
	6 Primaries										7 Primaries										8 Primaries											
	51	52	53	54	55	56	57	58	59	60	61	62	63	64	65	66	67	68	69	70	71	72	73	74	75	76	77	78	79	80		
7 Outlet	*	*	*	*	*	*	*	*	*	*	*	*	*	*	*	*	*	*	*	*	*	*	*	*	*	*	*	*	*	*		
8 Outlet	3	2	1	*	*	*	*	*	*	*	2	1	*	*	*	*	*	*	*	*	1	*	*	*	*	*	*	*	*	*		
9 Outlet	3	4	5	6	5	4	3	2	1	*	5	6	7	6	5	4	3	2	1	*	7	8	7	6	5	4	3	2	1	*		
10 Outlet	*	*	*	*	1	2	3	4	5	6	*	*	*	1	2	3	4	5	6	7	*	*	1	2	3	4	5	6	7	8		

Maximum Head Combinations

Head Size	Number of Secondary Outlets																															
	3 Primaries							4 Primaries							5 Primaries											6 Primaries							
	21	22	23	24	25	26	27	28	29	30	31	32	33	34	35	36	37	38	39	40	41	42	43	44	45	46	47	48	49	50	51	52
7 Outlet	3	2	1	*	*	*	*	4	3	2	1	*	*	*	5	4	3	2	1	*	*	*	*	*	*	2	1	*	*	*	*	*
8 Outlet	*	1	2	3	2	1	*	*	1	2	3	4	3	2	*	1	2	3	4	5	4	3	2	1	*	4	5	6	5	4	3	2
9 Outlet	*	*	*	*	1	2	3	*	*	*	*	*	1	2	*	*	*	*	*	*	1	2	3	4	5	*	*	*	1	2	3	4
10 Outlet	*	*	*	*	*	*	*	*	*	*	*	*	*	*	*	*	*	*	*	*	*	*	*	*	*	*	*	*	*	*	*	*

Head Size	Number of Secondary Outlets																															
	7 Primaries											8 Primaries																				
	53	54	55	56	57	58	59	60	61	62	63	64	65	66	67	68	69	70	71	72	73	74	75	76	77	78	79	80	*	*	*	*
7 Outlet	3	2	1	*	*	*	*	*	*	*	*	*	*	*	*	*	*	*	*	*	*	*	*	*	*	*	*	*	*	*	*	*
8 Outlet	4	5	6	7	6	5	4	3	2	1	*	8	7	6	5	4	3	2	1	*	*	*	*	*	*	*	*	*	*	*	*	*
9 Outlet	*	*	*	*	1	2	3	4	5	6	7	*	1	2	3	4	5	6	7	8	7	6	5	4	3	2	1	*	*	*	*	*
10 Outlet	*	*	*	*	*	*	*	*	*	*	*	*	*	*	*	*	*	*	*	*	1	2	3	4	5	6	7	8	*	*	*	*

Distribution - Divider Head

Item	Part No.	Description	Qty
		SEVEN OUTLET DIVIDER HEAD	
1	N31177	Divider Head - 7 Outlet	1
2	N31160	Access Door - 7 Outlet	1
3	N31165	Clip	2
4	N31171	Gasket - 7 Outlet	1
5	N31012	Carriage Bolt - 5/16 x 1 1/4	2
6	N31014	Hex Jam Nut - 5/16	2
7	N31016	Wing Nut - 5/16	2
	N31187	7 Outlet Divider Head Assembly (Includes All Above Items)	
		EIGHT OUTLET DIVIDER HEAD	
1	N31178	Divider Head - 8 Outlet	1
2	N31161	Access Door - 8 Outlet	1
3	N31165	Clip	2
4	N31172	Gasket - 8 Outlet	1
5	N31012	Carriage Bolt - 5/16 x 1 1/4	2
6	N31014	Hex Jam Nut - 5/16	2
7	N31016	Wing Nut - 5/16	2
	N31188	8 Outlet Divider Head Assembly (Includes All Above Items)	
		NINE OUTLET DIVIDER HEAD	
1	N31179	Divider Head - 9 Outlet	1
2	N31162	Access Door - 9 Outlet	1
3	N31165	Clip	2
4	N31173	Gasket - 9 Outlet	1
5	N31012	Carriage Bolt - 5/16 x 1 1/4	2
6	N31014	Hex Jam Nut - 5/16	2
7	N31016	Wing Nut - 5/16	2
	N31189	9 Outlet Divider Head Assembly (Includes All Above Items)	
		TEN OUTLET DIVIDER HEAD	
1	N31180	Divider Head - 10 Outlet	1
2	N31163	Access Door - 10 Outlet	1
3	N31165	Clip	2
4	N31174	Gasket - 10 Outlet	1
5	N31012	Carriage Bolt - 5/16 x 1 1/4	2
6	N31014	Hex Jam Nut - 5/16	2
7	N31016	Wing Nut - 5/16	2
	N31190	10 Outlet Divider Head Assembly (Includes All Above Items)	
		CORRUGATED DIFFUSER PIPE	
8	N15135	Pipe - Corr Diff - Divider Head	1
9	W-469	Hex Bolt - 1/4 x 3/4	3
10	W-521	Lock Washer - 1/4	3
11	W-512	Hex Nut - 1/4	3

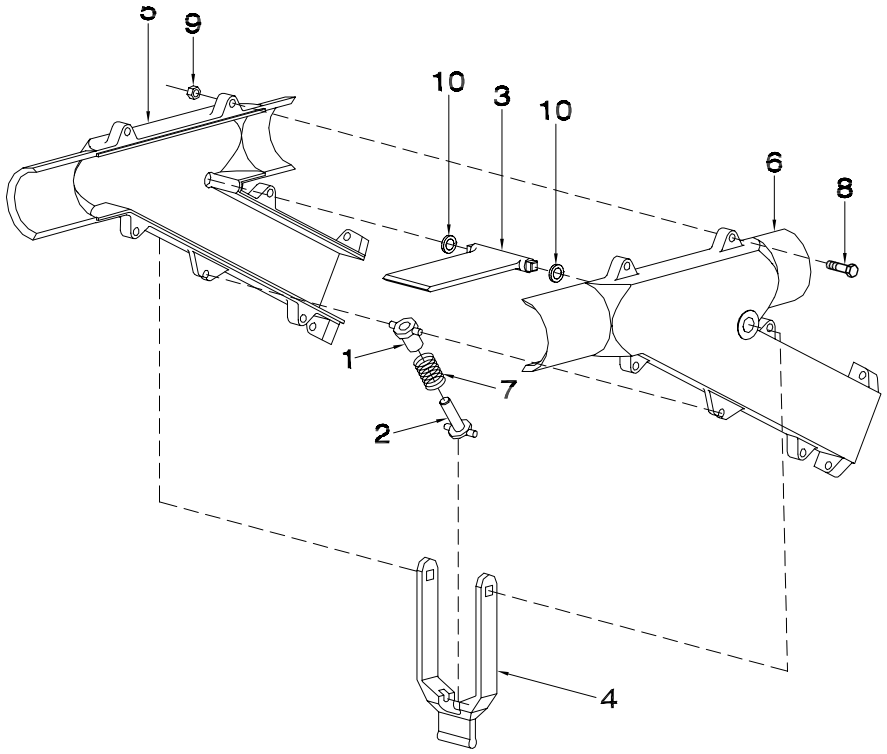

Item	Part No.	Description	Qty
1	N29080	Spring Pin - Female	1
2	N28805	Spring Pin - Male	1
3	N28806	Flapper	1
4	N28807	Handle	1
5	N28808	Valve Body - Right	1
6	N28809	Valve Body - Left	1
7	N11847	Spring - 0.72 OD x 1 3/4 Lg	1
8	W-470	Hex Bolt - 1/4 x 1 1/4 Lg	5
9	N22778	Locknut - 1/4 Nylon Insert	5
10	N29472	O-Ring - 9/16 OD X 7/16 ID	2
	N30068	Diverter Valve Assembly - Dual Shoot (Includes All Above Items)	

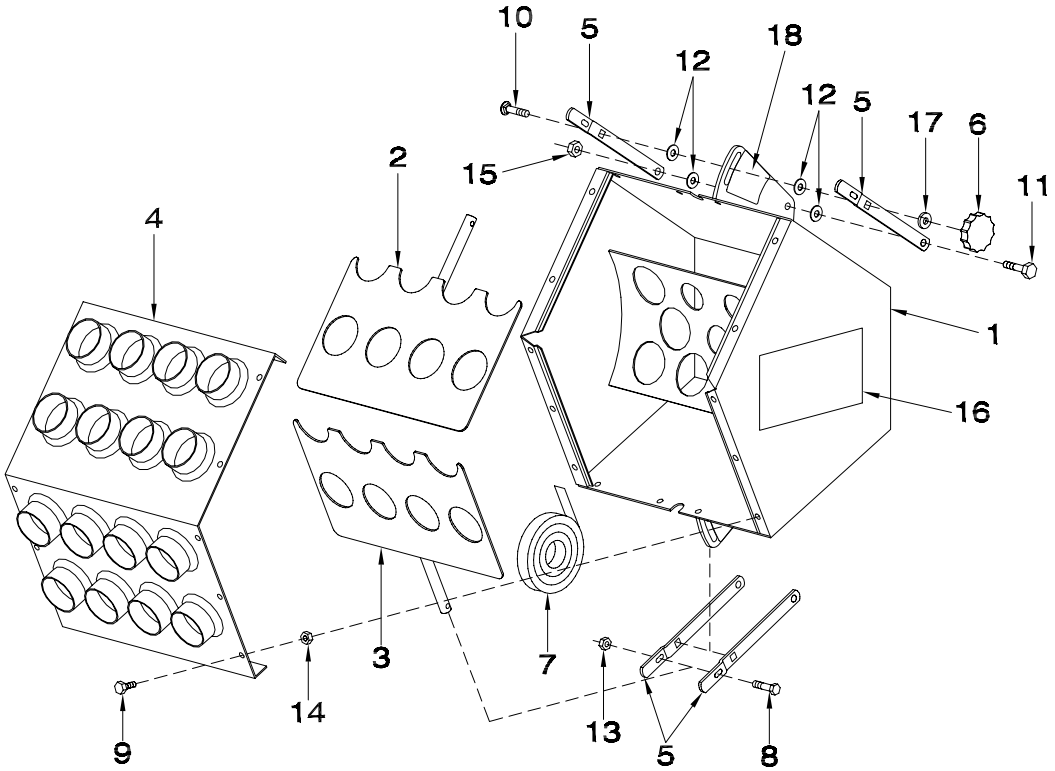

Item	Part No.	Description	Qty
1	N28820	Plenum Body - Dual Shoot	1
2	N28822	Shutoff Slide - Top	1
3	N28823	Shutoff Slide - Bottom	1
4	N28817	Plenum Face Plate - Dual Shoot	1
5	N27843	Adjustment Strap - Plenum	4
6	D-5204	Knob - 3/8 UNC (Black)	2
7	D-5590	Seal Strip - 1/16 x 3/4 (Bulk/Ft)	7 Ft
8	C-1471	Hex Bolt - 1/4 x 1 3/4 Lg	2
9	D-5247	Hex Bolt - 5/16 x 1/2 Lg	18
10	D-5260	Carriage Bolt - 3/8 x 1 1/4 Lg	2
11	W-187	Hex Bolt - 3/8 x 1 1/4 Lg	2
12	D-5579	Washer - 0.406 ID x 1 OD x 16 Ga	8
13	N15757	Locknut - 1/4	2
14	D-5278	Locknut - 5/16	18
15	M-3388	Locknut - 3/8 Unitorque	2
16	N28812	Decal - “Plenum Settings”	1
17	W-523	Lockwasher - 3/8	2
18	N28819	Decal - “Plenum Damper”	2
	N28824	Plenum Assembly - Dual Shoot (Includes All Above Items)	

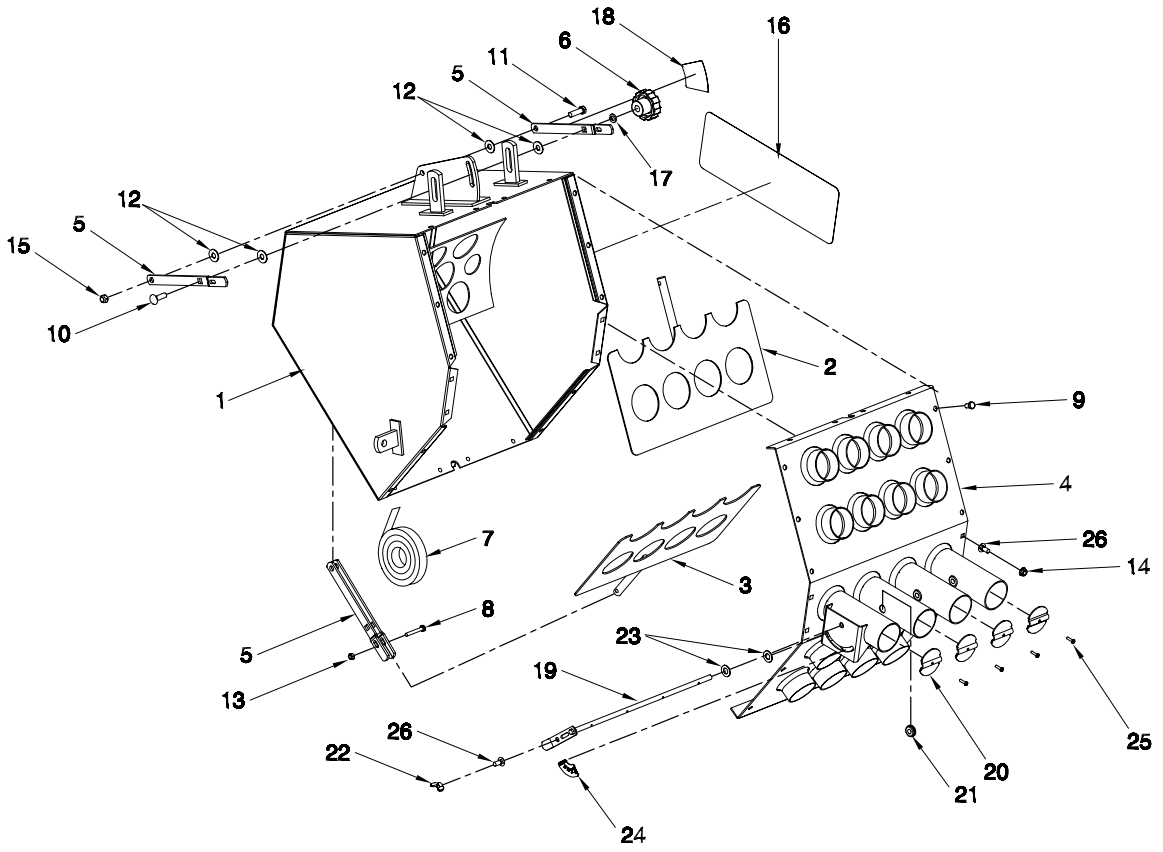

Item	Part No.	Description	Qty
1	N32180	Plenum Body - Broadcast	1
2	N32183	Shutoff Slide - Top	1
3	N32175	Shutoff Slide - Bottom	1
4	N32444	Plenum Face Plate - Broadcast	1
5	N27843	Adjustment Strap - Plenum	4
6	D-5204	Knob - 3/8 UNC (Black)	2
7	D-5590	Seal Strip - 1/16 x 3/4 (Bulk/Ft)	7 Ft
8	C-1471	Hex Bolt - 1/4 x 1 3/4 Lg	2
9	D-5247	Hex Bolt - 5/16 x 1/2 Lg	18
10	D-5260	Carriage Bolt - 3/8 x 1 1/4 Lg	2
11	W-187	Hex Bolt - 3/8 x 1 1/4 Lg	2
12	D-5579	Washer - 0.406 ID x 1 OD x 16 Ga	8
13	N15757	Locknut - 1/4	2
14	D-5278	Locknut - 5/16	22
15	M-3388	Locknut - 3/8 Unitorque	2
16	N32974	Decal - “Plenum Settings”	1
17	W-523	Lockwasher - 3/8	2
18	N28819	Decal - “Plenum Damper”	2
19	N32442	Handle - Air Valve	1
20	N29057	Flapper - Air Valve	4
21	N29058	Grommet - Air Valve	8
22	S-747	Wing Nut - 5/16	1
23	S-1201	Washer - Type A - 0.469 ID x .921 OD x 16 Ga	2
24	N29485	Decal - Open/Closed	1
25	N29486	Screw - #10 x 3/4 Hex Self Tap	4
26	D-5259	Carriage Bolt - 5/16 x 3/4 Lg	5
	N32440	Plenum Assembly - Broadcast (Includes All Above Items)	

Section 5:
Fan & Auger Drives

Section Contents

Engine Drive Fan 5-2
Engine Drive Auger Hydraulics 5-6
Tow Behind Hydraulic Drive w/o Auger 5-8
Tow Behind Hydraulic Drive w/Auger 5-10
Tow Between Hydraulic Drive w/o Auger 5-12
Tow Between Hydraulic Drive w/Auger 5-14
Tow Between Hydraulic Drive w/Front Latch Auger 5-16
Xpress Tow Between Hydraulic Drive (Prior to November 2004) 5-18
Xpress Tow Between Hydraulic Drive (From November 2004) 5-20
Tow Between Implement Hydraulics 5-22

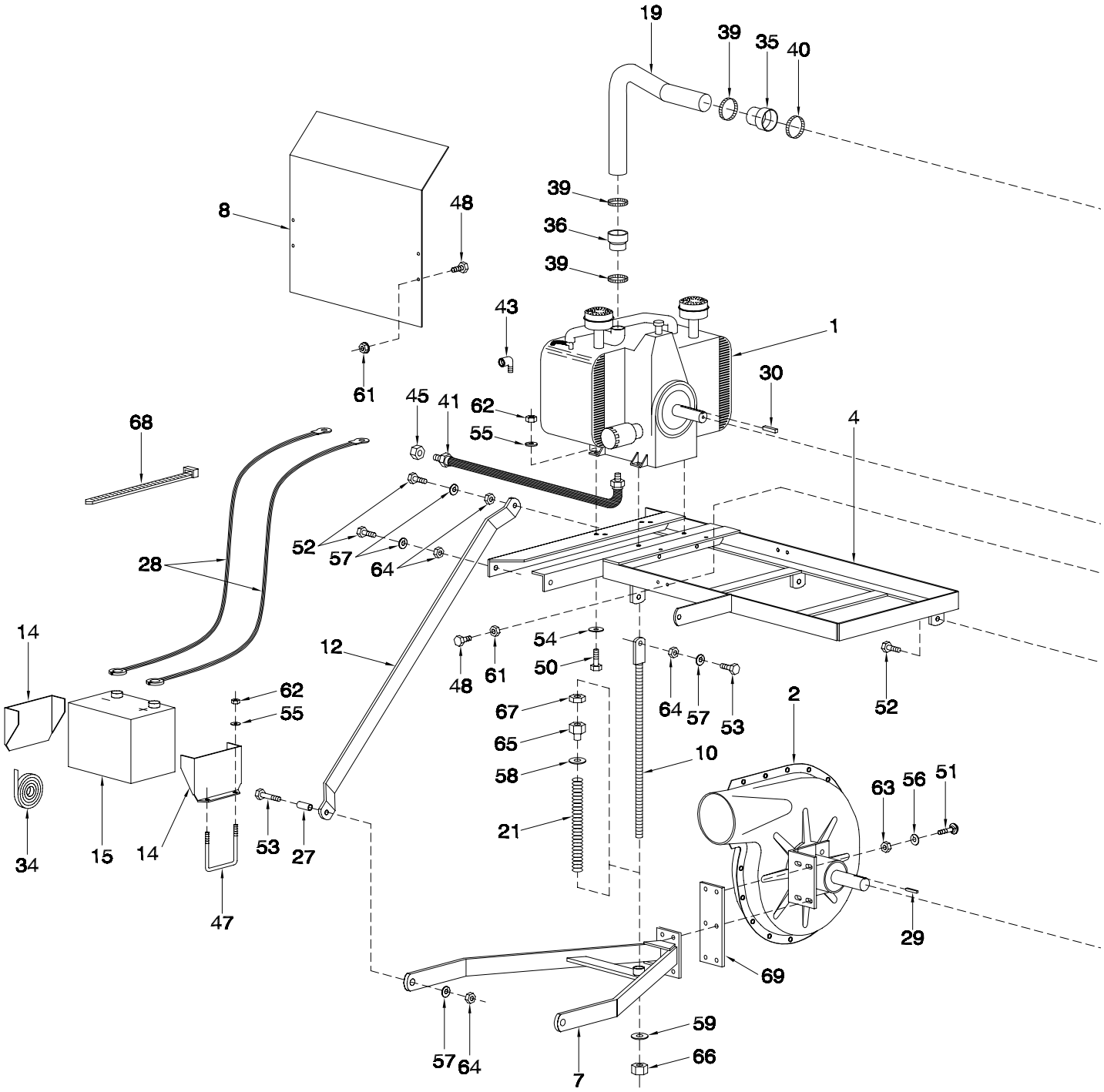
19
39
35
40
8
48
39
36
39
43
1
61
30
45
41
62
55
4
68
28
52
57
64
14
12
54
50
48
61
64
57
53
52
2
62
55
67
65
58
10
63
56
51
34
15
14
53
27
21
47
29
69
57
64
59
66
7

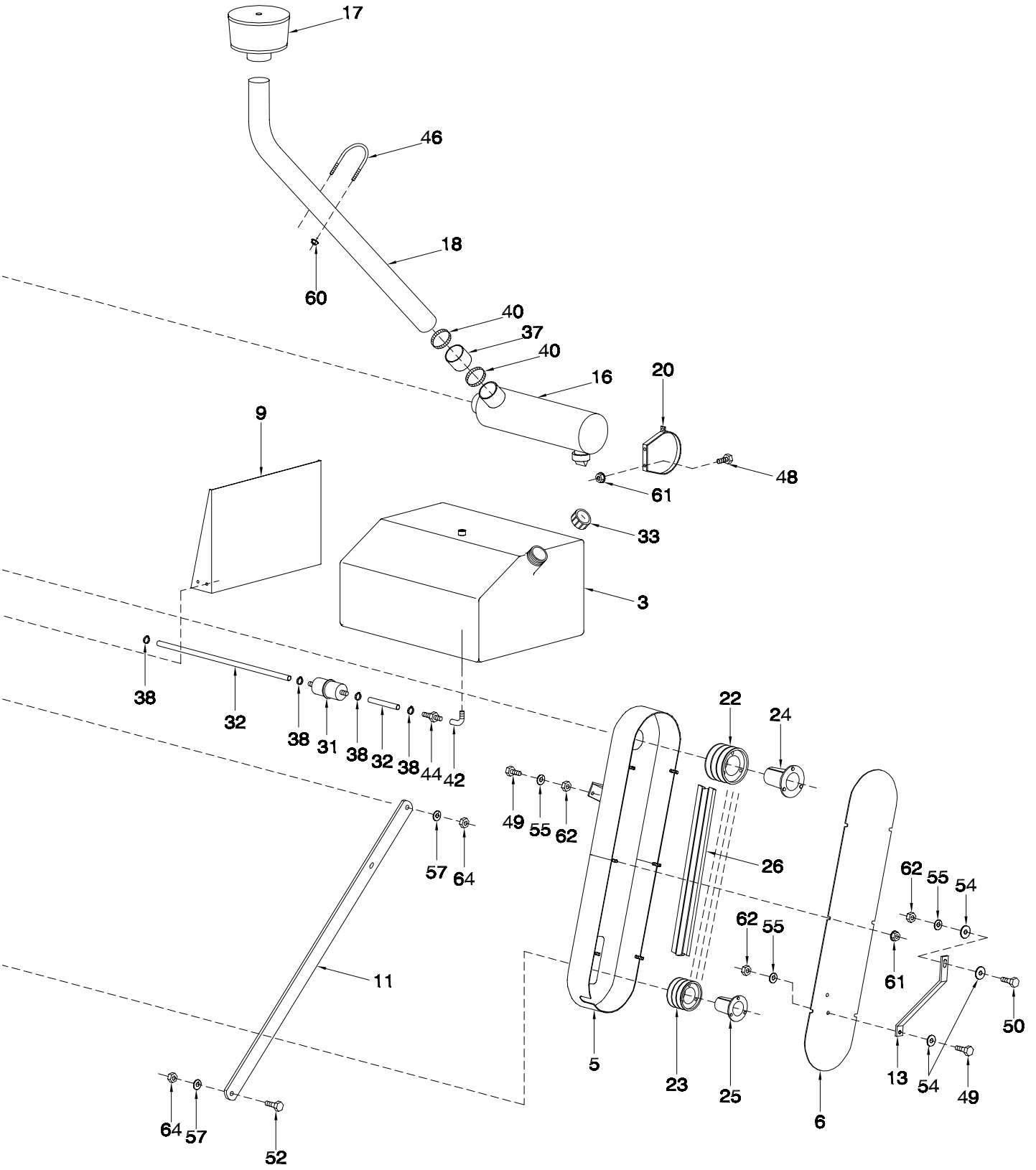
17
46
18
60
40
37
40
16
20
48
61
9
33
3
38
32
38
31
38
32
38
44
42
49
55
62
22
24
26
57
64
11
64
57
52
5
23
25
6
62
55
54
61
62
55
13
54
49
50

Fan & Auger Drives - Engine Drive Fan

1	N19350	Engine - Kohler - 20 HP - M20 Magnum Series 7130	1
	N21336	Engine - Onan - 24 HP - P-224 Performer Series 7180 / 7240 / 7252 / 7300	1
2	N19369	Fan (See Pg 7-1)	1
3	N15410	Fuel Tank c/w Fuel Cap	1
4	N19295	Frame - Engine Mount	1
5	N19375	Guard - Belt (Engine) 7130	1
	N21396	Guard - Belt (Engine) 7180 / 7240 / 7252 / 7300	1
6	N19380	Cover - Belt Guard	1
7	N27635	Mount - Fan (Engine) 7130 / 7180	1
	N27636	Mount - Fan (Engine) 7240 / 7252 / 7300	1
8	N27741	Shield - Grain	1
9	N19388	Shield - Heat	1
10	N19334	Rod - Adjusting	1
11	N27743	Strap - Support (Flat) 7130 / 7180	2
	N27873	Strap - Support (Flat) 7240 / 7252 / 7300	2
12	N27744	Strap - Support (Formed) 7130 /7180	1
	N27874	Strap - Support (Formed) 7240 / 7252 / 7300	1
13	N27871	Strap - Belt Guard	1
14	N19677	Holder - Battery	2
15	N14244	Battery - Agricultural - 12 Volt	1
16	N14249	Air Cleaner	1
17	N14247	Full View Pre-Cleaner	1
18	N19312	Pipe - Air Intake - Pre-Cleaner	1
19	N27736	Pipe - Air Intake 7130	1
	N27737	Pipe - Air Intake 7180	1
	N27738	Pipe - Air Intake 7240	1
	N27739	Pipe - Air Intake 7300	1
	N31624	Pipe - Air Intake 7252	1
20	N14248	Band - Mounting	2
21	F12968	Spring - 1.8 OD x 11 1/4 Inner	1
22	N29461	Pulley - 3 TA/B 52/56	1
23	N29459	Pulley - 3 TA/B 36/40	1
24	N19318	Tapered Bushing - P1 x 1 7/16 (Includes Hardware)	1
25	N19317	Tapered Bushing - P1 x 7/8 (Includes Hardware)	1
26	N31051	Tri-Power Belt - B x 68 (See Note)	3
27	D-5064	Bushing - 3/4 OD x 5/8 Lg	2
28	N15010	Battery Cable - 48 Neg/Pos	2
29	N19084	Key - 3/16 SQ x 1 1/4	1
30	N19072	Key - 3/8 SQ x 2	1
31	N19660	Fuel Filter - In Line	1
32	R480031	Fuel Line - (Bulk/ft)	3.83ft
33	N15053	Fuel Cap	1
34	N15716	Seal Strip - 1/4 x 1 (Bulk/ft)	4 Ft
35	N19007	Reducer - Air Intake - 2 1/2 Dia to 2 Dia	1
36	N19008	Reducer - 2 Dia to 1 3/4 Dia 7130	1
	R480069	Connector - 2 ID x 3 Lg (Bulk/ft) 7180 / 7240 / 7252 / 7300	1
37	R480070	Hose - 2 1/2 Dia x 3 Lg (Bulk/ft)	1
38	N15715	Hose Clamp - 1/2 Dia	4
39	N19010	Hose Clamp - 2 Dia	3
40	N19009	Hose Clamp - 2 1/2 Dia	3
41	N19520	Hyd Hose - 3/8 x 28 Lg w/3/4-16 MJIC x 3/8 MNPT	1
42	W-565	Street Elbow - 1/4 NPT	1
43	N21633	Street Elbow - 1 NPT x 90 degree 7130 ONLY	2
44	N15018	Male Barbed Fitting - 1/4 NPT	1
45	D10820	Plug Cap - 1/2 FJIC	1
46	N15096	U-Bolt - 1/4 Dia x 2 1/2	1

Fan & Auger Drives - Engine Drive Fan

47	N19723	U-Bolt - 3/8 x 4 1/16 x 6 15/16	2
48	F-1767	Hex Bolt - 5/16 x 3/4 Lg	12
49	W-475	Hex Bolt - 3/8 x 1 Lg	3
50	W-187	Hex Bolt - 3/8 x 1 1/4 Lg 7130	5
	W-477	Hex Bolt - 3/8 x 1 1/2 Lg 7180 / 7240 / 7252 / 7300	5
51	D-5262	Carriage Bolt - 7/16 x 2 Lg	4
52	S-776	Hex Bolt - 1/2 x 1 1/2 Lg	8
53	W-488	Hex Bolt - 1/2 x 2 Lg	2
54	D-5489	Flatwasher - 3/8	7
55	W-523	Lockwasher - 3/8	12
56	W-524	Lockwasher - 7/16	4
57	W-525	Lockwasher - 1/2	10
58	C12375	Spring Rest Washer - 3/4	1
59	W-541	Flatwasher - 3/4	1
60	D-5277	Serrated Locknut - 1/4	2
61	D-5278	Serrated Locknut - 5/16	18
62	W-514	Hex Nut - 3/8	11
63	W-515	Hex Nut - 7/16	4
64	W-516	Hex Nut - 1/2	10
65	C12376	Spring Rod Nut - 3/4	1
66	D-5275	Locknut - 3/4 Unitorque	1
67	W-575	Jam Nut - 3/4	1
68	D-4838	Tie Strap	5
69	N27466	Plate - Adaptor - Dual Plenum	1
		The Following Are Not Shown:	
	N19002	Wire Connector - (Package of 3)	1
	N19019	Decal - Warning “ROTATING SHIELD”	1
	N19023	Decal - Danger “HOT”	1
	N21170	Decal - “UNLEADED FUEL ONLY”	1
	C-3902	Decal - “MORRIS”	1
	N19280	Oil Filter 7130	
	N21408	Oil Filter 7180 / 7240 / 7252 / 7300	
	N19282	Gas Filter 7130	
	N21409	Gas Filter 7180 / 7240 / 7252 / 7300	
	N15956	Primary Air Element	
	N15957	Safety Air Element	

Note:
For Air Carts with Pulleys #N19316 (3TA56) and #N16634 (3TA40)
use Belt #N19314

For Air Carts with Pulleys #N29461 (3TA/B 52/56) and #N29459 (3TA/B 36/40)
use Belt #N31051

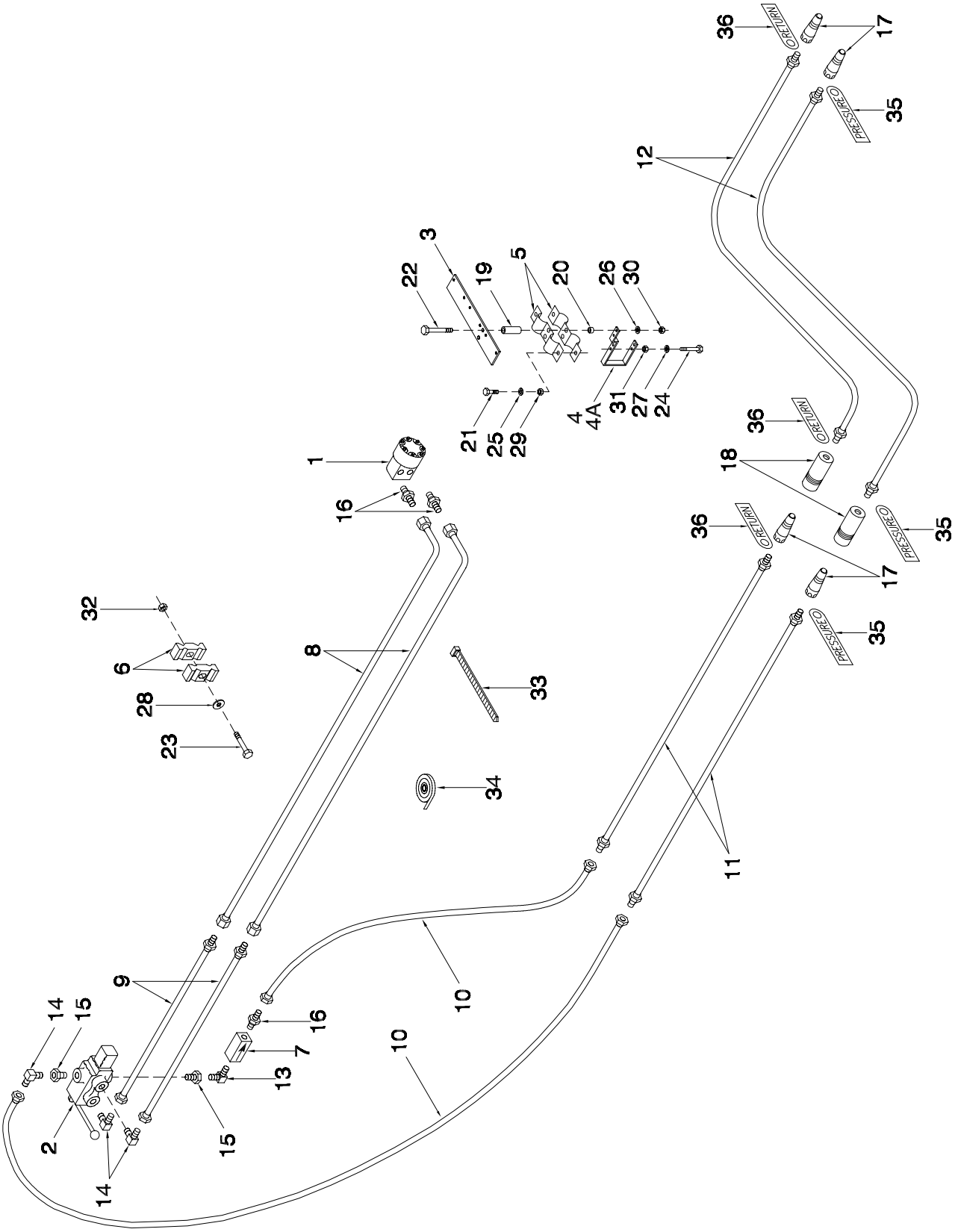
36
17
35
12
3
22
19
5
20
26
30
4
4A
31
27
24
21
25
29
1
16
18
32
6
28
23
8
33
34
11
9
10
14
15
7
13
2

Fan & Auger Drives - Engine Drive Auger Hydraulics

Item	Part No.	Description	Qty
1	N15982	Orbit Motor	1
	N16731	Seal kit for N15982	
	N25319	Shaft for N15982	
2	N15024	Control Valve	1
	N31605	Seal kit for N15024	
	N24595	Handle for N15024	
3	N21690	Mount Bracket	1
4	N21691	Mount Bracket - 4	1
4A	N27589	Mount Bracket - 6	1
5	N16608	Pioneer Coupler Clamp	2
6	C-4698	Nylon Oil Line Clamp	4
7	N15023	Check Valve - 1/2 FNPT	1
8	F-4560	Oil Line - 5/8 x 99 Lg w/90 Bend	2
9	C-4387	Hyd Hose - 1/2 x 36 Lg w/7/8-14 MJIC x 7/8-14 FJIC	2
10	N19365	Hyd Hose - 1/2 x 140 Lg w/7/8-14 FJIC 7130 / 7180 / 7252	2
	N21721	Hyd Hose - 1/2 x 180 Lg w/7/8-14 FJIC 7240 / 7300	2
11	N16146	Hyd Hose - 1/2 x 192 Lg w/7/8-14 MJIC x 1/2 MNPT	2
12	N19454	Hyd Hose - 1/2 x 396 Lg w/1/2 MNPT	2
13	N15033	90 Male Elbow - 1/2 MNPT	1
14	C-4400	90 Male Elbow - 1/2 MNPT x 7/8-14 MJIC	3
15	N15032	Reducer - 3/4 MNPT x 1/2 FNPT	2
16	C-4399	Male Adapter - 1/2 MNPT x 7/8-14 MJIC	3
17	C-817	Male Pioneer Tip - 1/2 FNPT	4
18	C-818	Pioneer Coupler - 1/2 FNPT	2
19	N19458	Spacer	2
20	N13901	Bushing - 5/8 OD x 3/8 ID x 3/8 Lg	2
21	W-469	Hex Bolt - 1/4 x 3/4 Lg	2
22	N15196	Hex Bolt - 5/16 x 4 Lg	2
23	W-479	Hex Bolt - 3/8 x 2 1/4 Lg	2
24	C-3918	Hex Bolt - 3/8 x 5 Lg	1
25	W-521	Lockwasher - 1/4	2
26	W-522	Lockwasher - 5/16	2
27	W-523	Lockwasher - 3/8	1
28	W-538	Flatwasher - 3/8	2
29	W-512	Hex Nut - 1/4	2
30	W-513	Hex Nut - 5/16	2
31	W-514	Hex Nut - 3/8	1
32	D-5279	Serrated Locknut - 3/8	2
33	D-4838	Tie Strap	10
34	W-3022	Teflon Tape	1
35	N29962	Tag - Hose ID - Air Tank - Fan/Auger - PRESSURE	3
36	N29963	Tag - Hose ID - Air Tank - Fan/Auger - RETURN	3

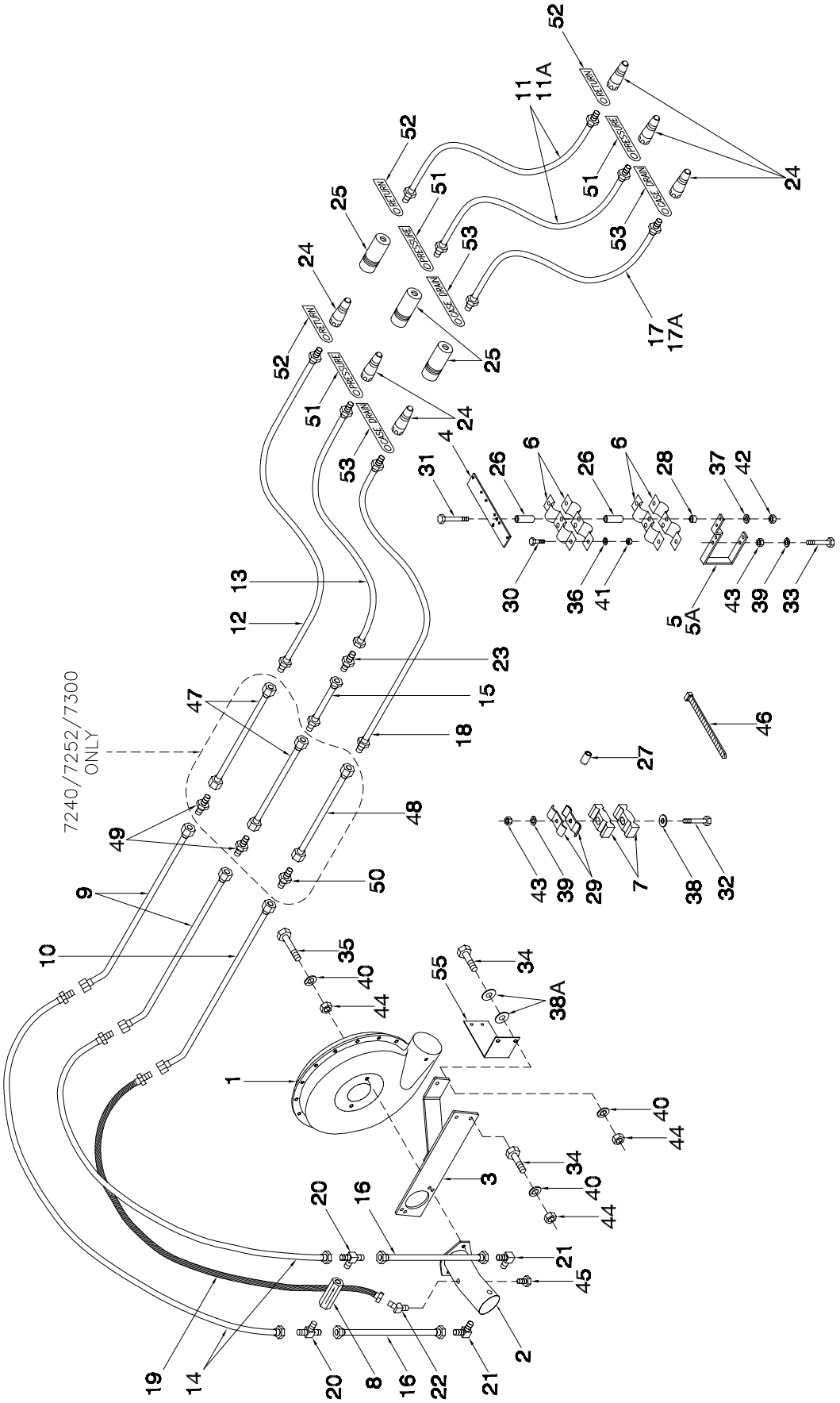
7240/7252/7300
ONLY

Fan & Auger Drives - Tow Behind Hydraulic Drive w/o Auger

Item	Part No.	Description	Qty
1	N16263	Fan (See Pg 7-2)	1
2	N16265	Hydraulic Motor - Rexroth - 10cc 7130	1
	N29372	Hydraulic Motor - Rexroth - 12cc 7180 / 7240 / 7252 / 7300	1
	N25508	Seal Kit for Rexroth Motors (Seal Only - N25507)	
3	N19357	Fan Bracket - Tow Behind	1
	N32512	Fan Bracket - Tow Behind 7252 - Broadcast	1
4	N21690	Mount Bracket	1
5	N21691	Mount Bracket - 4	1
5A	N27589	Mount Bracket - 6	1
6	N16608	Pioneer Coupler Clamp	4
7	C-4698	Nylon Oil Line Clamp	4
8	N16399	Check Valve - 3 PSI - 1 1/16-12 ORB	1
9	N27601	Oil Line - 1 x 108 Lg w/45 Bend	2
10	N27602	Oil Line - 1/2 x 112 Lg w/45 Bend	1
11	N19442	Hyd Hose - 3/4 x 396 Lg w/1/2 MNPT	2
11A	N19452	Hyd Hose - 3/4 x 348 Lg w/1/2 MNPT	2
12	N19344	Hyd Hose - 3/4 x 222 Lg w/1 5/16-12 MJIC x 1/2 MNPT	1
13	N19343	Hyd Hose - 3/4 x 210 Lg w/1 1/16-12 FJIC x 1/2 MNPT	1
14	N19434	Hyd Hose - 3/4 x 35 Lg w/15/16-12 MJIC x 11/16-12 FJIC	2
15	N19342	Hyd Hose - 3/4 x 12 Lg w/1 5/16-12 MJIC x 1 1/16-12 FJIC	1
16	N15991	Hyd Hose - 3/4 x 12 Lg w/1 1/16-12 FJIC	2
17	N19443	Hyd Hose - 3/8 x 396 Lg w/1/2 MNPT	1
17A	N19451	Hyd Hose - 3/8 x 348 Lg w/1/2 MNPT	1
18	N19346	Hyd Hose - 3/8 x 222 Lg w/3/4-16 MJIC x 1/2 MNPT	1
19	N19475	Hyd Hose - 3/8 x 48 Lg w/9/16-18 FJIC x 3/4-16 FJIC	1
20	N16388	Male Tee - (1) 1 1/16-12 ORB x (2) 1 1/16-12 MJIC	2
21	N16359	90 Male Elbow - 1 1/16-12 ORB x 1 1/16-12 MJIC	2
22	N19578	45 Male Elbow - 9/16-18 ORB x 9/16-18 MJIC	1
23	N19348	Connector - 1 1/16-12 MJIC	1
24	C-817	Male Pioneer Tip - 1/2 FNPT	6
25	C-818	Pioneer Coupler - 1/2 FNPT	3
26	N19458	Spacer	4
27	N21632	Oil Line Spacer	1
28	N13901	Bushing - 5/8 OD x 3/8 ID x 3/8 Lg	2
29	D-4808	Oil Line Clamp	4
30	W-469	Hex Bolt - 1/4 x 3/4 Lg	4
31	S13337	Hex Bolt - 5/16 x 6 Lg	2
32	D-5249	Hex Bolt - 3/8 x 3 1/4 Lg	2
33	C-3918	Hex Bolt - 3/8 x 5 Lg	1
34	S-776	Hex Bolt - 1/2 x 1 1/2 Lg	4
35	S-1189	Hex Bolt - 1/2 x 1 3/4 Lg	2
36	W-521	Lockwasher - 1/4	4
37	W-522	Lockwasher - 5/16	2
38	W-538	Flatwasher - 3/8	2
38A	S-751	Washer - 1.125 OD x .531 ID x .188	2
39	W-523	Lockwasher - 3/8	3
40	W-525	Lockwasher - 1/2	5
41	W-512	Hex Nut - 1/4	4
42	W-513	Hex Nut - 5/16	2
43	W-514	Hex Nut - 3/8	3
44	W-516	Hex Nut - 1/2	5
45	N16621	Plug - 9/16-18 UNF ORB	1
46	D-4838	Tie Strap	10
47	N28659	Oil Line - 1 x 26 Lg 7240 / 7252 / 7300 ONLY	2
48	N28658	Oil Line - 1/2 x 26 Lg 7240 / 7252 / 7300 ONLY	1
49	N16346	Connector - 1 5/16-12 MJIC 7240 / 7252 / 7300 ONLY	2
50	N25754	Connector - 3/4-16 MJIC 7240 / 7252 / 7300 ONLY	1
51	N29962	Tag - Hose ID - Air Tank - Fan/Auger - PRESSURE	3
52	N29963	Tag - Hose ID - Air Tank - Fan/Auger - RETURN	3
53	N29964	Tag - Hose ID - Air Tank - Fan/Auger - CASE DRAIN	3
54	N29373	Key - 6mm x 15 Lg (Not Shown)	1
55	N21475	Slow Moving Sign Bracket (Hydraulic Drive ONLY)	1
	N19023	Decal - Danger “HOT” (Not Shown)	1

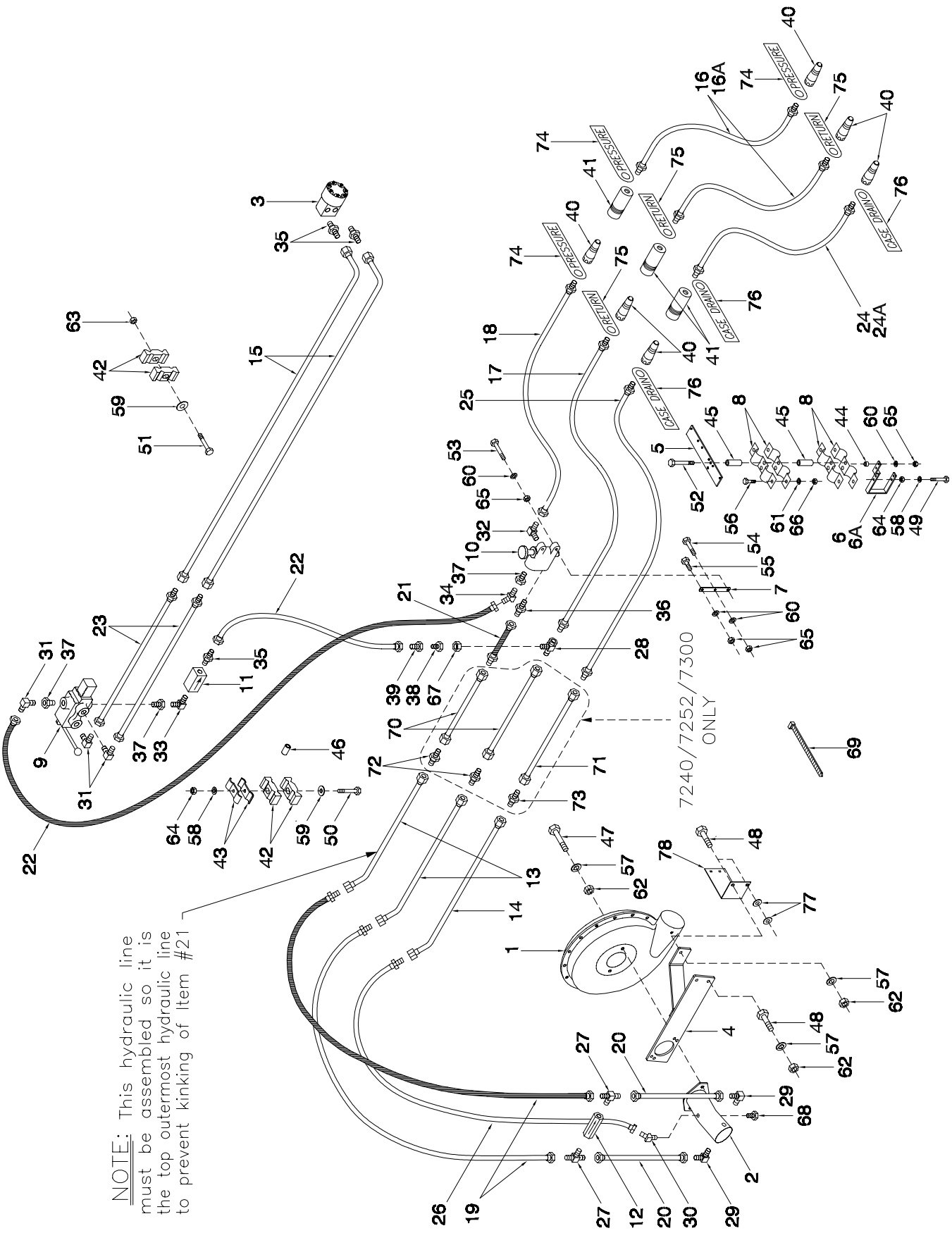
NOTE: This hydraulic line must be assembled so it is the top outermost hydraulic line to prevent kinking of Item #21
7240/7252/7300 ONLY
PRESSURE
RETURN
CASE DRAIN

Fan &Auger Drives- Tow Behind Hydraulic Drive w/Auger

Item	Part No.	Description	Qty
1	N16263	Fan (See pg 7-2)	1
2	N16265	Hydraulic Motor - Rexroth - 10cc 7130	1
	N29372	Hydraulic Motor - Rexroth - 12cc 7180/7240 /7252/ 7300	1
	N25508	Seal Kit for Rexroth Motors	
	N25507	Seal Only for Rexroth Motors	
3	N15982	Orbit Motor	1
	N16731	Seal Kit for N15982	
	N25319	Shaft for N15982	
4	N19357	Fan Bracket - Tow Behind	1
	N32512	Fan Bracket - Tow Behind 7252 - Broadcast	1
5	N21690	Mount Bracket	1
6	N21691	Mount Bracket - 4	1
6A	N27589	Mount Bracket - 6	1
7	N19713	Strap	1
8	N16608	Pioneer Coupler Clamp	4
9	N15024	Control Valve	1
	N31605	Seal Kit for N15024	
	N24595	Handle for N15024	
10	N19340	Selector Valve - 3/4 FNPT	1
	N31603	Seal Kit for N19340	
	C26358	Knob for N19340	
11	N15023	Check Valve - 1/2 FNPT	1
12	N16399	Check Valve - 3 PSI - 1 1/16-12 ORB	1
13	N27601	Oil Line - 1 x 108 Lg w/45 Bend	2
14	N27602	Oil Line - 1/2 x 112 Lg w/45 Bend	1
15	F-4560	Oil Line - 5/8 x 99 Lg w/90 Bend	2
16	N19442	Hyd Hose - 3/4 x 396 Lg w/1/2 MNPT	2
16A	N19452	Hyd Hose - 3/4 x 348 Lg w/1/2 MNPT	2
17	N19344	Hyd Hose - 3/4 x 222 Lg w/1 5/16-12 MJIC x 1/2 MNPT	1
18	N19343	Hyd Hose - 3/4 x 210 Lg w/1 1/16-12 MJIC x 1/2 MNPT	1
19	N19434	Hyd Hose - 3/4 x 35 Lg w/1 5/16-12 MJIC x 1 1/16-12 FJIC	2
20	N15991	Hyd Hose - 3/4 x 12 Lg w/1 1/16-12 FJIC	2
21	N19342	Hyd Hose - 3/4 x 12 Lg w/1 5/16-12 MJIC x 1 1/16-12 FJIC	1
22	N19365	Hyd Hose - 1/2 x 140 Lg w/7/8-14 MJIC x 7/8-14 FJIC ...	
		Used on 7130 / 7180 / 7252	2
	N21721	Hyd Hose - 1/2 x 180 Lg w/7/8-14 MJIC x 7/8-14 FJIC ...	
		Used on 7240 / 7300	2
23	C-4387	Hyd Hose - 1/2 x 36 Lg w/7/8-14 MJIC x 7/8-14 FJIC	2
24	N19443	Hyd Hose - 3/8 x 396 Lg w/1/2 MNPT	1
24A	N19451	Hyd Hose - 3/8 x 348 Lg w/1/2 MNPT	1
25	N19346	Hyd Hose - 3/8 x 222 Lg w/3/4-16 MJIC x 1/2 MNPT	1
26	N19475	Hyd Hose - 3/8 x 48 Lg w/9/16-18 FJIC x 3/4-16 MJIC ...	1
27	N16388	Male Tee - (1) 1 1/16-12 ORB x (2) 1 1/16-12 MJIC	1
28	N19336	Swivel Tee - (1) 1 5/16-12 FJIC x (2) 1 5/16-12 MJIC	1
29	N16359	90 Elbow - 1 1/16-12 ORB x 1 1/16-12 MJIC	2
30	N19578	45 Elbow - 9/16-18 ORB x 9/16-18 MJIC	1
31	C-4400	90 Elbow - 1/2 MNPT x 7/8-14 MJIC	3
32	N19341	90 Elbow - 1 1/16-12 MJIC x 3/4 MNPT	1
33	N15033	90 Elbow - 1/2 MNPT	1
34	C-4402	45 Elbow - 1/2 MNPT x 7/8-14 MJIC	1
35	C-4399	Adapter - 1/2 MNPT x 7/8-14 MJIC	3
36	N19339	Adapter - 1 1/16-12 MJIC x 3/4 MNPT	1
37	N15032	Reducer - 3/4 MNPT x 1/2 FNPT	3
38	N19338	Reducer - 1 1/16-12 MJIC	1
39	N19337	Reducer - 7/8-14 MJIC x 1 1/16-12 FJIC	1
40	C-817	Male Pioneer Tip - 1/2 FNPT	6
41	C-818	Pioneer Coupler - 1/2 FNPT	3
42	C-4698	Nylon Oil Line Clamp	8
43	D-4808	Oil Line Clamp	4
44	N13901	Bushing - 5/8 OD x 3/8 ID x 3/8 Lg	2
45	N19458	Spacer	4
46	N21632	Oil Line Spacer	1
47	S-1189	Hex Bolt - 1/2 x 1 3/4 Lg	2
48	S-776	Hex Bolt - 1/2 x 1 1/2 Lg	4
49	C-3918	Hex Bolt - 3/8 x 5 Lg	1
50	D-5249	Hex Bolt - 3/8 x 3 1/4 Lg	2
51	W-479	Hex Bolt - 3/8 x 2 1/4 Lg	2
52	S13337	Hex Bolt - 5/16 x 6 Lg	2
53	S-1303	Hex Bolt - 5/16 x 2 Lg	1
54	C-3035	Hex Bolt - 5/16 x 1 3/4 Lg	1
55	F-1767	Hex Bolt - 5/16 x 3/4 Lg	1
56	W-469	Hex Bolt - 1/4 x 3/4 Lg	4
57	W-525	Lockwasher - 1/2	6
58	W-523	Lockwasher - 3/8	3
59	W-538	Flatwasher - 3/8	4
60	W-522	Lockwasher - 5/16	5
61	W-521	Lockwasher - 1/4	4
62	W-516	Hex Nut - 1/2	6
63	D-5279	Serrated Locknut - 3/8	2
64	W-514	Hex Nut - 3/8	3
65	W-513	Hex Nut - 5/16	5
66	W-512	Hex Nut - 1/4	4
67	N19432	Nut - 1 5/16-12 JIC	1
68	N16621	Plug - 9/16-18 UNF ORB	1
69	D-4838	Tie Strap	15
70	N28659	Oil Line - 1 x 26 Lg 7240 / 7252 / 7300 ONLY	2
71	N28658	Oil Line - 1/2 x 26 Lg 7240 / 7252 / 7300 ONLY	1
72	N16346	Conector - 1 5/16-12 MJIC 7240 / 7252 / 7300 ONLY	2
73	N25754	Conector - 3/4-16 MJIC 7240 / 7252 / 7300 ONLY	1
74	N29962	Tag - Hose ID - Air Tank - Fan/Auger - PRESSURE	3
75	N29963	Tag - Hose ID - Air Tank - Fan/Auger - RETURN	3
76	N29964	Tag - Hose ID - Air Tank - Fan/Auger - CASE DRAIN	3
77	S-751	Washer - 1.125 OD x .531 ID x .188	2
78	N21475	Slow Moving Sign Bracket (Hydraulic Drive ONLY)	1
	N19031	Decal - “AUGER FAN” (Not Shown)	1
	N19023	Decal - Danger “HOT (Not Shown)	1

Fan & Auger Drives
Tow Between Hydraulic Drive w/o Auger

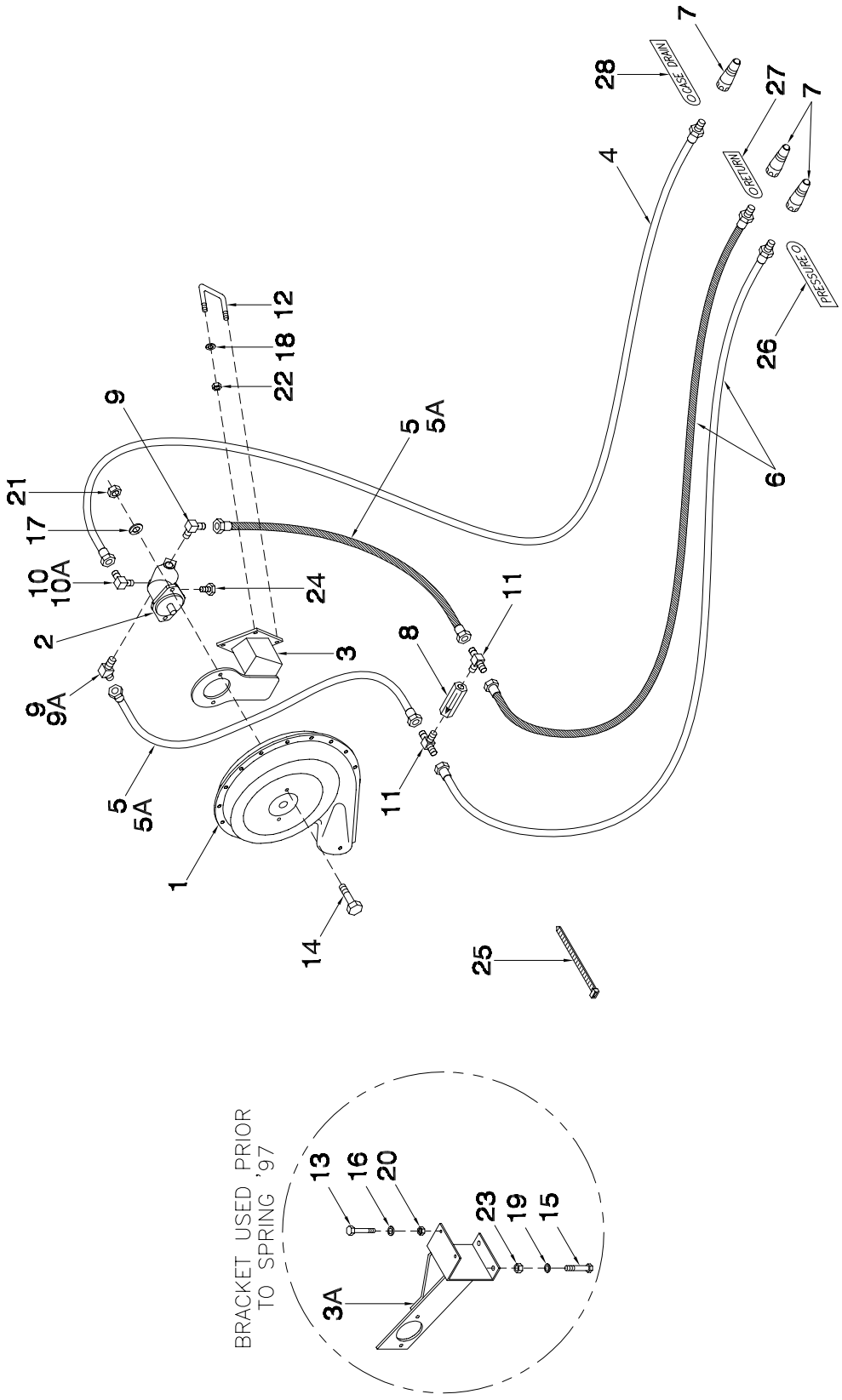

Fan & Auger Drives - Tow Between Hydraulic Drive w/o Auger

Item	Part No.	Description	Qty
1	N16263	Fan (See pg 7-2)	1
2	N16265	Hydraulic Motor - Rexroth - 10cc 7130	1
	N29372	Hydraulic Motor - Rexroth - 12cc 7180 / 7240 7252 / 7300	1
	N25508	Seal Kit for Rexroth Motors (Seal Only - N25507)	
3	N31032	Fan Mount Bracket 7130 / 7180 (Spring '97 to Present)	1
	N31033	Fan Mount Bracket 7240 / 7300 (Spring '97 to Present)	1
	N33198	Fan Mount Bracket 7252 - Broadcast	1
	N31542	Fan Mount Bracket 7252	1
3A	N19546	Fan Mount Bracket (Prior to Spring '97)	1
4	N16181	Hyd Hose - 3/8 x 156 Lg w/9/16-18 FJIC x 1/2 MNPT	1
5	N25644	Hyd Hose - 3/4 x 35 Lg w/1 1/16-12 FJIC (Use with Bracket #3)	2
5A	N15991	Hyd Hose - 3/4 x 12 Lg w/1 1/16-12 FJIC (Use with Bracket #3A)	2
6	N16454	Hyd Hose - 3/4 x 130 Lg w/1 1/16-12 FJIC x 1/2 MNPT	2
7	C-817	Male Pioneer Tip - 1/2 FNPT	3
8	N16399	Check Valve	1
9	N16359	90 Male Elbow - 1 1/16-12 MJIC x 1 1/16-12 ORB (2 used with Bracket)	1
9A	N31096	45 Male Elbow - 1 1/16-12 MJIC x 1 1/16-12 ORB (Use with Bracket #3)	1
10	N16143	90 Male Elbow - 9/16-18 MJIC x 9/16-18 ORB (Use with Bracket #3)	1
10A	N19578	45 Male Elbow - 9/16-18 MJIC x 9/16-18 ORB (Use with Bracket #3A)	1
11	N16388	Male Tee - (2) 1 1/16-12 MJIC x (1) 1 1/16-12 ORB	2
12	H21351	U-Bolt - 1/2 x 6 1/16 x 5 1/16 (Use with Bracket #3 on 7130 / 7180)	2
	N31034	U-Bolt - 1/2 x 8 1/16 x 5 1/16 (Use with Bracket #3 on 7240 / 7252 / 73	2
13	W-187	Hex Bolt - 3/8 x 1 1/4 Lg (Use with Bracket #3A)	2
14	S-1189	Hex Bolt - 1/2 x 1 3/4 Lg	2
15	W-497	Hex Bolt - 5/8 x 1 1/2 Lg (Use with Bracket #3A)	2
16	W-523	Lockwasher - 3/8	2
17	W-525	Lockwasher - 1/2	2
18	W-525	Lockwasher - 1/2 (Use with Bracket #3)	4
19	W-526	Lockwasher - 5/8 (Use with Bracket #3A)	2
20	W-514	Hex Nut - 3/8 (Use with Bracket #3A)	2
21	W-516	Hex Nut - 1/2	2
22	W-516	Hex Nut - 1/2 (Use with Bracket #3)	4
23	W-517	Hex Nut - 5/8 (Use with Bracket #3A)	2
24	N16621	Plug - 9/16-18 UNF ORB	1
25	D-4838	Nylon Tie Strap (black) - 14 1/2 Lg	4
26	N29962	Tag - Hose ID - Air Tank - Fan/Auger - PRESSURE	1
27	N29963	Tag - Hose ID - Air Tank - Fan/Auger - RETURN	1
28	N29964	Tag - Hose ID - Air Tank - Fan/Auger - CASE DRAIN	1
	N19023	Decal - Danger "HOT" (Not Shown)	1

Fan & Auger Drives
Tow Between Hydraulic Drive w/Auger

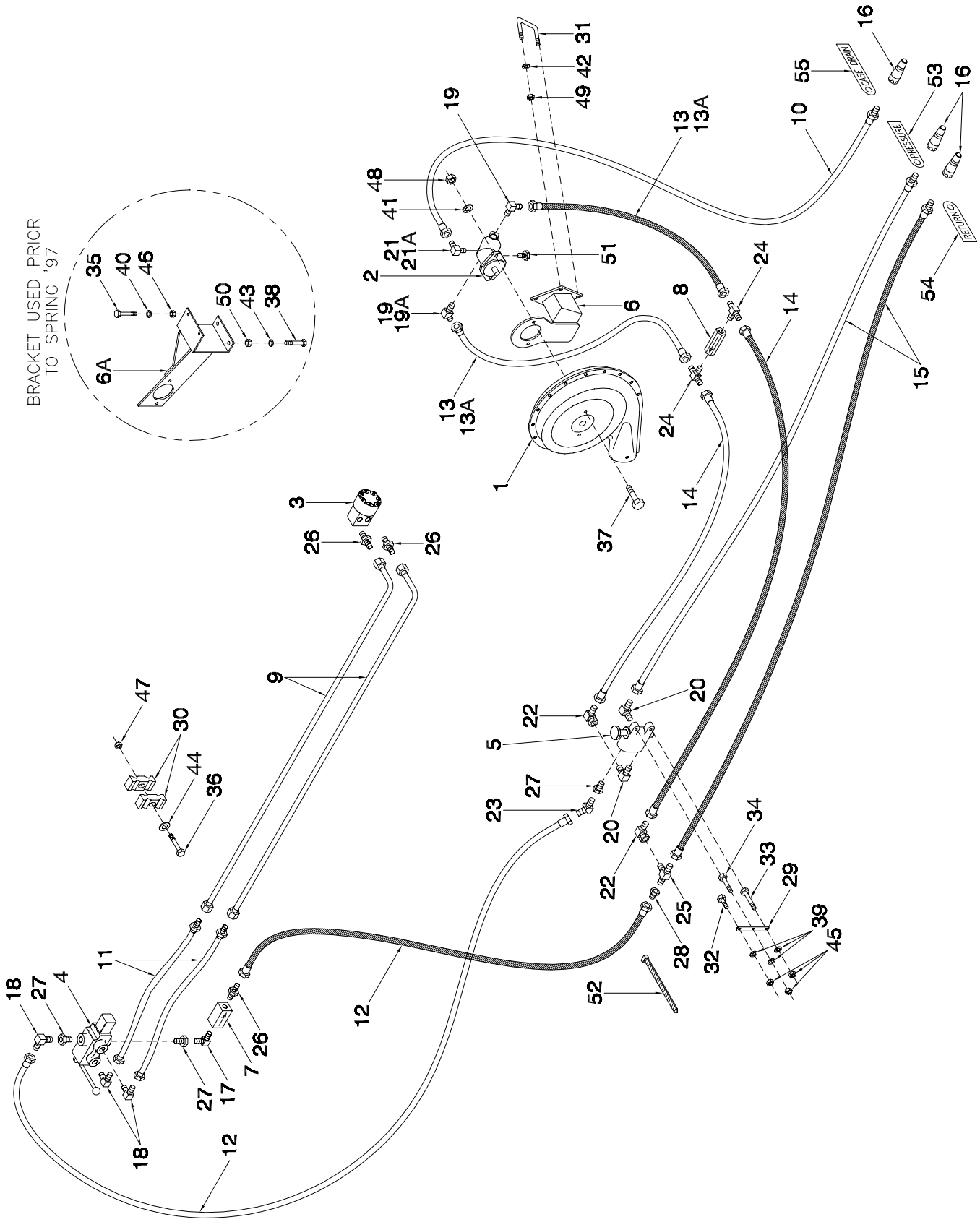

Fan & Auger Drives - Tow Between Hydraulic Drive w/Auger

Item	Part No.	Description	Qty
1	N16263	Fan (See pg 7-2)	1
2	N16265	Hydraulic Motor - Rexroth - 10cc 7130	1
	N29372	Hydraulic Motor - Rexroth - 12cc 7180 / 7240 / 7252 / 7300	1
	N25508	Seal Kit for Rexroth Motors	
	N25507	Seal Only for Rexroth Motors	
3	N15982	Orbit Motor	1
	N16731	Seal Kit for N15982	
	N25319	Shaft for N15982	
4	N15024	Control Valve	1
	N31605	Seal Kit for N15024	
	N24595	Handle for N15024	
5	N19340	Selector Valve - 3/4 FNPT	1
	N31603	Seal Kit for N19340	
	C26358	Knob for N19340	
6	N31032	Fan Mount Bracket 7130 / 7180 (Spring '97 to Present)	1
	N31033	Fan Mount Bracket 7240 / 7300 (Spring '97 to Present)	1
	N33198	Fan Mount Bracket 7252 - Broadcast	1
	N31542	Fan Mount Bracket 7252	1
6A	N19546	Fan Mount Bracket (Prior to Spring '97)	1
7	N15023	Check Valve - 1/2 FNPT	1
8	N16399	Check Valve - 0 PSI - 1 1/16-12 ORB	1
9	F-4560	Oil Line - 5/8 x 99 Lg w/90 Bend	2
10	N16181	Hyd Hose - 3/8 x 156 Lg w/9/16-18 FJIC x 1/2 MNPT	1
11	C-4387	Hyd Hose - 1/2 x 36 Lg w/7/8-14 MJIC x 7/8-14 FJIC	2
12	N19365	Hyd Hose - 1/2x140 Lg w/7/8-14 MJICx7/8-14 FJIC	
		7130 / 7180 / 7252 (Tow Behind)	2
	C26343	Hyd Hose - 1/2 x 162 Lg w/7/8-14 MJIC x 7/8-14 FJIC	
		7252 (Tow Between)	2
	N21721	Hyd Hose - 1/2 x 180 Lg w/7/8-14 MJIC x 7/8-14 FJIC	
		7240 / 7300	2
13	N25644	Hyd Hose - 3/4 x 35 Lg w/1 1/16-12 FJIC (Use with Brkt #6)	2
13A	N15991	Hyd Hose - 3/4 x 12 Lg w/1 1/16-12 FJIC (Use with Brkt #6A)	2
14	N25644	Hyd Hose - 3/4 x 35 Lg w/1 1/16-12 FJIC	2
15	N16454	Hyd Hose - 3/4 x 130 w/1 1/16-12 FJIC x 1/2 MNPT	2
16	C-817	Male Pioneer Tip - 1/2 FNPT	3
17	N15033	90 Male Elbow - 1/2 MNPT	1
18	C-4400	90 Male Elbow - 7/8-14 MJIC x 1/2 MNPT	3
19	N16359	90 Male Elbow - 1 1/16-12 MJIC x 1 1/16-12 ORB	
		(2 used with Bracket #6A)	1
19A	N31096	45 Male Elbow - 1 1/16-12 MJIC x 1 1/16-12 ORB	
		(Use with Bracket #6)	1
20	N19341	90 Male Elbow - 1 1/16-12 MJIC x 3/4 MNPT	2
21	N16143	90 Male Elbow - 9/16-18 MJIC x 9/16-18 ORB	
		(Use with Bracket #6)	1

Item	Part No.	Description	Qty
21A	N19578	45 Male Elbow - 9/16-18 MJIC x 9/16-18 ORB	
		(Use with Brkt #6A)	1
22	N21189	90 Male Elbow - 1 1/16-12 MJIC x 1 1/16-12 FJIC	
		(Use with Bracket #6 ONLY)	2
23	C-4402	45 Male Elbow - 7/8-14 MJIC x 1/2 MNPT	1
24	N16388	Male Tee - (2) 1 1/16-12 JIC x (1) 1 1/16-12 ORB	2
25	N19549	Male Tee - (3) 1 1/16-12 JIC	1
26	C-4399	Connector - 7/8-14 MJIC x 1/2 MNPT	3
27	N15032	Reducer - 3/4 MNPT x 1/2 FNPT	3
28	N19337	Reducer - 7/8-14 MJIC x 1 1/16-12 FJIC	1
29	N19713	Strap	1
30	C-4698	Nylon Oil Line Clamp	4
31	H21351	U-Bolt -1/2 x 6 1/16 x 5 1/16	
		(Use with Bracket #6 on 7130 / 7180)	2
	N31034	U-Bolt - 1/2 x 8 1/16 x 5 1/16	
		(Use with Braket #6 on 7240 / 7252 / 7300)	2
32	F-1767	Hex Bolt - 5/16 x 3/4 Lg	1
33	C-3035	Hex Bolt - 5/16 x 1 3/4 Lg	1
34	S-1303	Hex Bolt - 5/16 x 2 Lg	1
35	W-187	Hex Bolt - 3/8 x 1 1/4 Lg (Use with Bracket #6A)	2
36	W-479	Hex Bolt - 3/8 x 2 1/4 Lg	2
37	S-1189	Hex Bolt - 1/2 x 1 3/4 Lg	2
38	W-497	Hex Bolt - 5/8 x 1 1/2 Lg (Use with Bracket #6A)	2
39	W-522	Lockwasher - 5/16	3
40	W-523	Lockwasher - 3/8 (Use with Bracket #6A)	2
41	W-525	Lockwasher - 1/2	2
42	W-525	Lockwasher - 1/2 (Use with Bracket #6)	4
43	W-526	Lockwasher - 5/8 (Use with Bracket #6A)	2
44	W-538	Flatwasher - 3/8	2
45	W-513	Hex Nut - 5/16	3
46	W-514	Hex Nut - 3/8 (Use with Bracket #6A)	3
47	D-5279	Serrated Locknut - 3/8	2
48	W-516	Hex Nut - 1/2	2
49	W-516	Hex Nut - 1/2 (Use with Bracket #6)	4
50	W-517	Hex Nut - 5/8 (Use with Bracket #6A)	2
51	N16621	Plug - 9/16-18 UNF ORB	1
52	D-4838	Nylon Tie Strap (black) - 14 1/2 Lg	4
53	N29962	Tag - Hose ID - Air Tank - Fan/Auger - PRESSURE	1
54	N29963	Tag - Hose ID - Air Tank - Fan/Auger - RETURN	1
55	N29964	Tag - Hose ID -Air Tank- Fan/Auger - CASE DRAIN	1
	N19023	Decal - "Hot" (Not Shown)	1
	N19031	Decal - "Auger - Fan" (Not Shown)	1

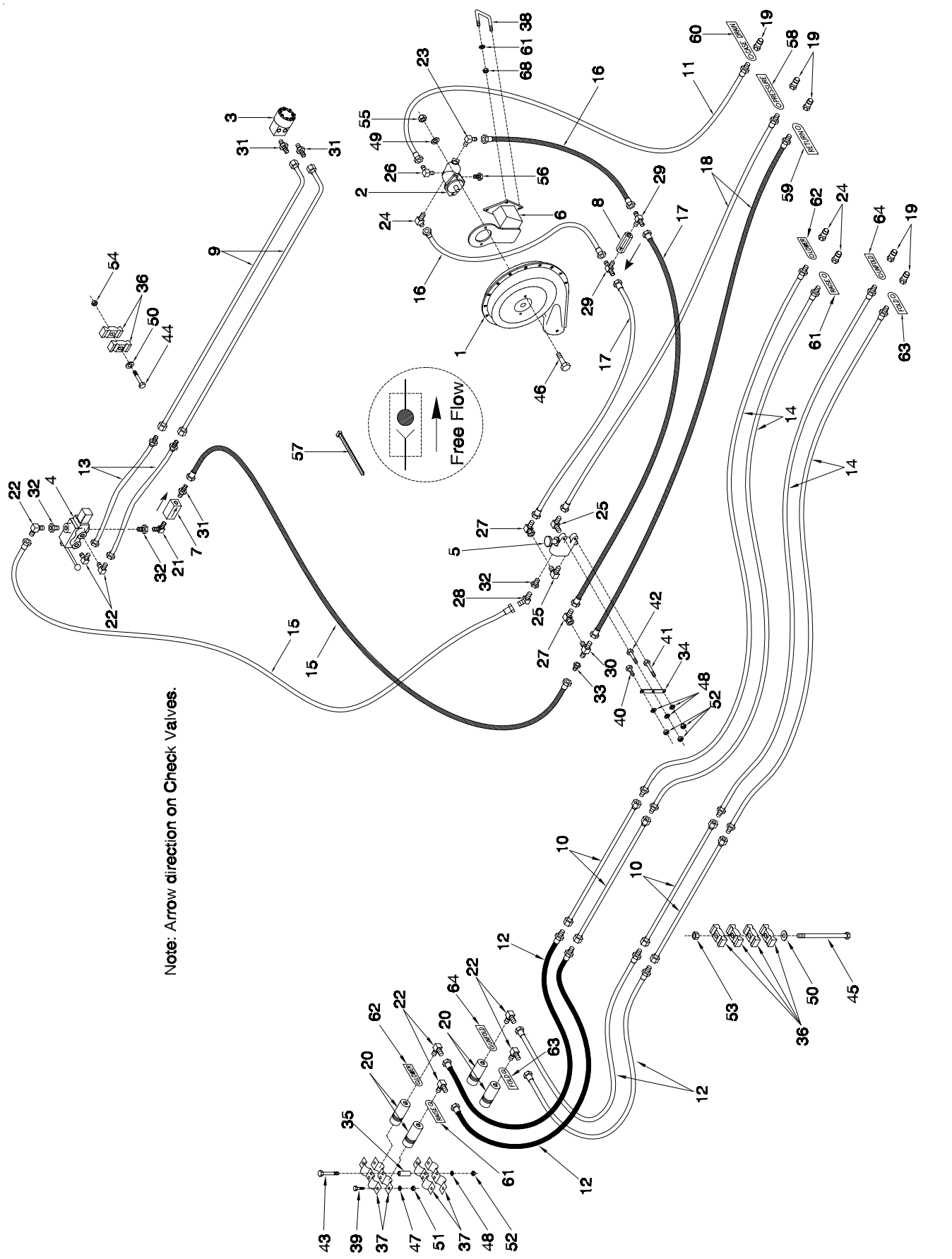
Free Flow
Note: Arrow direction on Check Valves.

Fan & Auger Drives - Tow Between Hydraulic Drive w/Front Latch Auger

Item	Part No.	Description	Qty
1	N16263	Fan	1
2	N29372	Hydraulic Motor - Rexroth - 12cc	1
	N25508	Seal Kit for Rexroth Motors - 12cc	
	N25507	Seal Only for Rexroth Motors 12cc	
3	N15982	Orbit Motor	1
	N16731	Seal Kit for N15982	
	N25319	Shaft for N15982	
4	N15024	Control Valve	1
	N31605	Seal Kit for N15024	
	N24595	Handle for N15024	
5	N19340	Selector Valve - 3/4 FNPT	1
	N31603	Seal Kit for N19340	
	C36358	Knob for N19340	
6	N31032	Fan Mount Bracket 7130 / 7180	1
	N31033	Fan Mount Bracket 7240 / 7252 / 7300	1
7	N15023	Check Valve - 1/2 FNPT	1
8	N16399	Check Valve - 0 PSI - 1 1/16-12 ORB	1
9	F-4560	Oil Line - 5/8 x 99 Lg w/90 Bend	2
10	C-4367	Oil Line - 5/8 x 80 Lg (7180)	4
	C-4369	Oil Line - 5/8 x 96 Lg (7240)	4
11	N16181	Hyd Hose - 3/8 x 156 Lg w/9/16-18 FJIC x 1/2 MNPT	1
12	C-4385	Hyd Hose - 1/2 x 24 Lg w/7/8-14 MJIC x 7/8-14 FJIC	4
13	C-4387	Hyd Hose - 1/2 x 36 Lg w/7/8-14 MJIC x 7/8-14 FJIC (7130 & 7180)	2
	C-4389	Hyd Hose - 1/2 x 60 Lg w/7/8-14 MJIC x 7/8-14 FJIC (7240, 7252, 7300)	2
14	N19548	Hyd Hose - 1/2 x 132 Lg w/7/8-14 MJIC x 1/2 MNPT	4
15	N19365	Hyd Hose - 1/2 x 140 Lg w/7/8-14 MJIC x 7/8-14 FJIC (7130, 7180)	2
	N21721	Hyd Hose - 1/2 x 180 Lg w/7/8-14 MJIC x 7/8-14 FJIC (7240, 7252, 7300)	2
16	N25644	Hyd Hose - 3/4 x 35 Lg w/1 1/16-12 FJIC	2
17	N25644	Hyd Hose - 3/4 x 35 Lg w/1 1/16-12 FJIC	2
18	N16454	Hyd Hose - 3/4 x 130 w/1 1/16-12 FJIC x 1/2 MNPT	2
19	C-817	Male Pioneer Tip - 1/2 FNPT	7
20	C-818	Pioneer Coupler - 1/2 FNPT	4
21	N15033	90 Male Elbow - 1/2 MNPT	1
22	C-4400	90 Male Elbow - 7/8-14 MJIC x 1/2 MNPT	8
23	N16359	90 Male Elbow - 1 1/16-12 MJIC x 1 1/16-12 ORB	1
24	N31096	45 Male Elbow - 1 1/16-12 MJIC x 1 1/16-12 ORB	1
25	N19341	90 Male Elbow - 1 1/16-12 MJIC x 3/4 MNPT	2
26	N16143	90 Male Elbow - 9/16-18 MJIC x 9/16-18 ORB	1
27	N21189	90 Male Elbow - 1 1/16-12 MJIC x 1 1/16-12 FJIC	2
28	C-4402	45 Male Elbow - 7/8-14 MJIC x 1/2 MNPT	1
29	N16388	Male Tee - (2) 1 1/16-12 JIC x (1) 1 1/16-12 ORB	2
30	N19549	Male Tee - (3) 1 1/16-12 JIC	1
31	C-4399	Connector - 7/8-14 MJIC x 1/2 MNPT	3
32	N15032	Reducer - 3/4 MNPT x 1/2 FNPT	3
33	N19337	Reducer - 7/8-14 MJIC x 1 1/16-12 FJIC	1
34	N19713	Strap	1
35	N19458	Spacer - 2	2
36	C-4698	Nylon Oil Line Clamp	12
37	N16608	Coupler Clamp - Female Pioneer	4
38	H21351	U-Bolt - 1/2 x 6 1/16 x 5 1/16 (7130 / 7180)	2
	N31034	U-Bolt - 1/2 x 8 1/16 x 5 1/16 (7240 / 7252 / 7300)	2
39	W-469	Hex Bolt - 1/4 x 3/4 Lg	4
40	F-1767	Hex Bolt - 5/16 x 3/4 Lg	1
41	C-3035	Hex Bolt - 5/16 x 1 3/4 Lg	1
42	S-1303	Hex Bolt - 5/16 x 2 Lg	1
43	N28332	Hex Bolt - 5/16 x 3 1/2 Lg	2
44	W-479	Hex Bolt - 3/8 x 2 1/4 Lg	2
45	C-1550	Hex Bolt - 3/8 x 4 Lg	2
46	S-1189	Hex Bolt - 1/2 x 1 3/4 Lg	2
47	W-521	Lockwasher - 1/4	4
48	W-522	Lockwasher - 5/16	5
49	W-525	Lockwasher - 1/2	2
50	W-538	Flatwasher - 3/8	4
51	W-512	Hex Nut - 1/4	4
52	W-513	Hex Nut - 5/16	5
53	M-3388	Locknut - 3/8 Unitorque	2
54	D-5279	Serrated Locknut - 3/8	2
55	W-516	Hex Nut - 1/2	2
56	N16621	Plug - 9/16-18 UNF ORB	1
57	D-4838	Nylon Tie Strap (black) - 14 1/2 Lg	8
58	N29962	Tag - Hose ID - Air Tank - Fan/Auger - PRESSURE	1
59	N29963	Tag - Hose ID - Air Tank - Fan/Auger - RETURN	1
60	N29964	Tag - Hose ID - Air Tank- Fan/Auger - CASE DRAIN	1
61	S29958	Tag - Hose ID - Depth Control - RAISE	2
62	S29959	Tag - Hose ID - Depth Control - LOWER	2
63	S29960	Tag - Hose ID - Wing Lift - FOLD	1
64	S29961	Tag - Hose ID - Wing Lift - UNFOLD	1
	N19031	Decal - “Auger/Fan” (Not Shown)	1

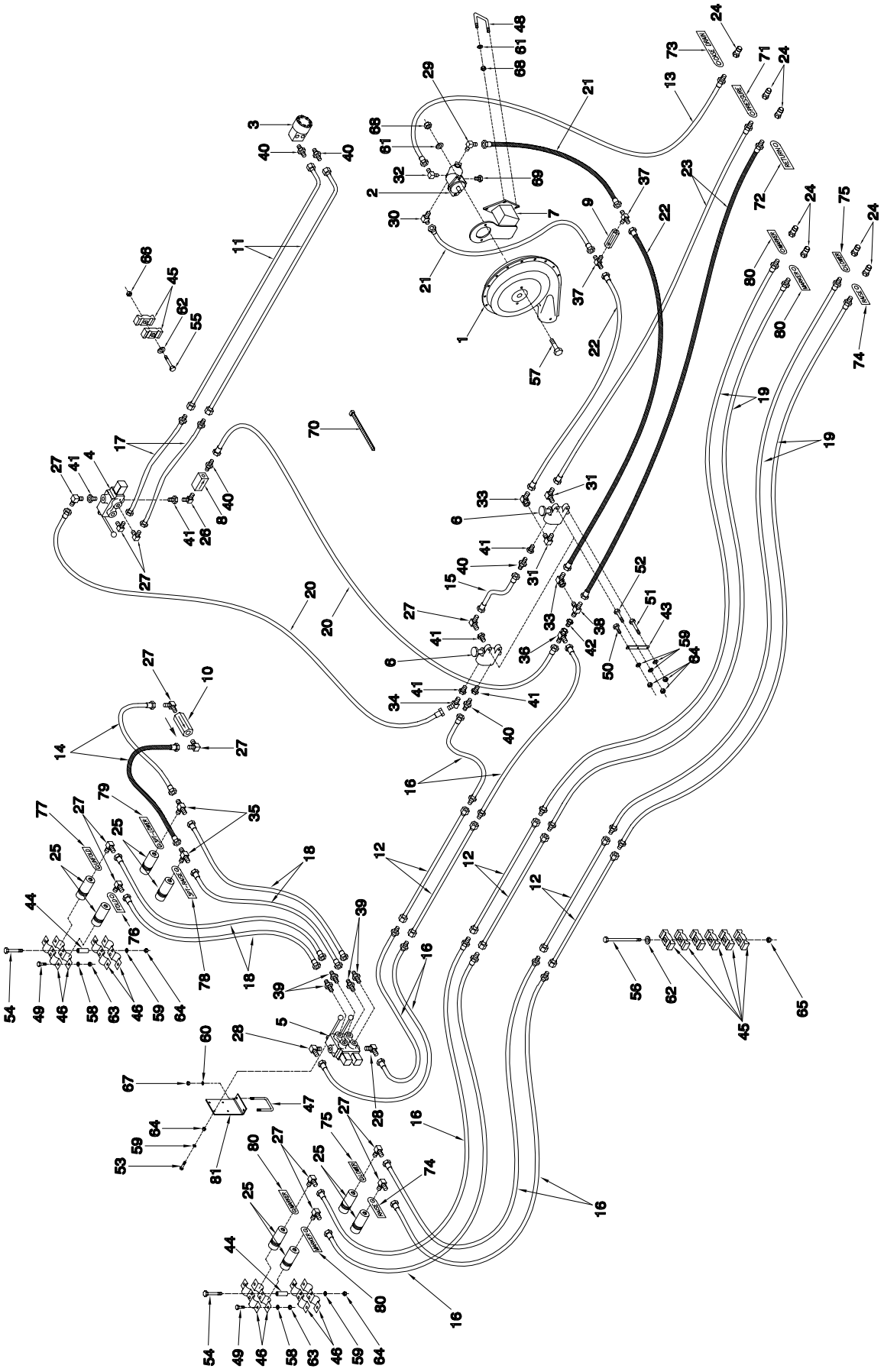

Fan & Auger Drives - Xpress Tow Between Hydraulic Drive (Prior to November 2004)

Item	Part No.	Description	Qty
1	N16263	Fan (See pg 7-2)	1
2	N29372	Hydraulic Motor - Rexroth - 12cc	1
	N25508	Seal Kit for Rexroth Motors - 12cc	
	N25507	Seal Only for Rexroth Motors 12cc	
3	N15982	Orbit Motor	1
	N16731	Seal Kit for N15982	
	N25319	Shaft for N15982	1
4	N15024	Control Valve	1
	N31605	Seal Kit for N15024	
	N24595	Handle for N15024	1
5	N34048	Control Valve - Dbl Spool	1
	N34087	Seal Kit for N34048	
	N34051	Handle for N34048	1
6	N19340	Selector Valve - 3/4 FNPT	2
	N31603	Seal Kit for N19340	
	C36358	Knob for N19340	2
7	N31032	Fan Mount Bracket 7180	1
	N31033	Fan Mount Bracket 7240	1
8	N15023	Check Valve - 1/2 FNPT	1
9	N16399	Check Valve - 0 PSI - 1 1/16-12 ORB	1
10	H-5545	Check Valve - 1/2 FNPT	1
11	F-4560	Oil Line - 5/8 x 99 Lg w/90 Bend	2
12	C-4367	Oil Line - 5/8 x 80 Lg (7180)	6
	C-4369	Oil Line - 5/8 x 96 Lg (7240)	6
13	N16181	Hyd Hose - 3/8 x 156 Lg w/9/16-18 FJIC x 1/2 MNPT	1
14	N34366	Hyd Hose - 1/2 x 12 Lg w/7/8-14 FJIC	2
15	C-4383	Hyd Hose - 1/2 x 20 Lg w/7/8-14 FJIC	1
16	C-4385	Hyd Hose - 1/2 x 24 Lg w/7/8-14 MJIC x 7/8-14 FJIC	8
17	C-4387	Hyd Hose - 1/2 x 36 Lg w/7/8-14 MJIC x 7/8-14 FJIC (7180)	2
	C-4389	Hyd Hose - 1/2 x 60 Lg w/7/8-14 MJIC x 7/8-14 FJIC (7240)	2
18	K-5685	Hyd Hose - 1/2 x 48 Lg w/7/8-14 FJIC x 7/8-14 FJIC	4
19	N19548	Hyd Hose - 1/2 x 132 Lg w/7/8-14 MJIC x 1/2 MNPT	4
20	N19365	Hyd Hose - 1/2 x 140 Lg w/7/8-14 MJIC x 7/8-14 FJIC (7180)	2
	N21721	Hyd Hose - 1/2 x 180 Lg w/7/8-14 MJIC x 7/8-14 FJIC (7240)	2
21	N25644	Hyd Hose - 3/4 x 35 Lg w/1 1/16-12 FJIC	2
22	N25644	Hyd Hose - 3/4 x 35 Lg w/1 1/16-12 FJIC	2
23	N16454	Hyd Hose - 3/4 x 130 w/1 1/16-12 FJIC x 1/2 MNPT	2
24	C-817	Male Pioneer Tip - 1/2 FNPT	7
25	C-818	Pioneer Coupler - 1/2 FNPT	8
26	N15033	90 Male Elbow - 1/2 MNPT	1
27	C-4400	90 Male Elbow - 7/8-14 MJIC x 1/2 MNPT	12
28	C24585	90 Male Elbow - 7/8-14 MJIC x 3/4-16 ORB	2
29	N16359	90 Male Elbow - 1 1/16-12 MJIC x 1 1/16-12 ORB	1
30	N31096	45 Male Elbow - 1 1/16-12 MJIC x 1 1/16-12 ORB	1
31	N19341	90 Male Elbow - 1 1/16-12 MJIC x 3/4 MNPT	2
32	N16143	90 Male Elbow - 9/16-18 MJIC x 9/16-18 ORB	1
33	N21189	90 Male Elbow - 1 1/16-12 MJIC x 1 1/16-12 FJIC	2
34	C-4402	45 Male Elbow - 7/8-14 MJIC x 1/2 MNPT	1
35	C-4396	Male Tee - (2) 7/8-14 MJIC x (1) 1/2 MNPT	2
36	H18746	Swivel Tee - (2) 7/8-14 MJIC x 7/8-14 FJIC	1
37	N16388	Male Tee - (2) 1 1/16-12 JIC x (1) 1 1/16-12 ORB	2
38	N19549	Male Tee - (3) 1 1/16-12 JIC	1
39	N34047	Connector - 7/8-14 MJIC x 9/16-18 MORB	4
40	C-4399	Connector - 7/8-14 MJIC x 1/2 MNPT	3
41	N15032	Reducer - 3/4 MNPT x 1/2 FNPT	6
42	N19337	Reducer - 7/8-14 MJIC x 1 1/16-12 FJIC	1
43	N19713	Strap	2
44	N19458	Spacer - 2	4
45	C-4698	Nylon Oil Line Clamp	16
46	N16608	Coupler Clamp - Female Pioneer	8
47	N15098	U-Bolt - 3/8 x 4 x 5	1
48	H21351	U-Bolt - 1/2 x 6 1/16 x 5 1/16 (7180)	2
	N31034	U-Bolt - 1/2 x 8 1/16 x 5 1/16 (7240)	2
49	W-469	Hex Bolt - 1/4 x 3/4 Lg	8
50	F-1767	Hex Bolt - 5/16 x 3/4 Lg	2
51	C-3035	Hex Bolt - 5/16 x 1 3/4 Lg	2
52	S-1303	Hex Bolt - 5/16 x 2 Lg	2
53	S-1302	Hex Bolt - 5/16 x 2 1/2 Lg	3
54	N28332	Hex Bolt - 5/16 x 3 1/2 Lg	4
55	W-479	Hex Bolt - 3/8 x 2 1/4 Lg	2
56	C-3664	Hex Bolt - 3/8 x 5 Lg	2
57	S-1189	Hex Bolt - 1/2 x 1 3/4 Lg	2
58	W-521	Lockwasher - 1/4	8
59	W-522	Lockwasher - 5/16	13
60	W-523	Lockwasher - 3/8	2
61	W-525	Lockwasher - 1/2	6
62	W-538	Flatwasher - 3/8	4
63	W-512	Hex Nut - 1/4	8
64	W-513	Hex Nut - 5/16	13
65	M-3388	Locknut - 3/8 Unitorque	2
66	D-5279	Serrated Locknut - 3/8	2
67	W-514	Hex Nut - 3/8	2
68	W-516	Hex Nut - 1/2	6
69	N16621	Plug - 9/16-18 UNF ORB	1
70	D-4838	Nylon Tie Strap (black) - 14 1/2 Lg	8
71	N29962	Tag - Hose ID - Air Tank - Fan/Auger - PRESSURE	1
72	N29963	Tag - Hose ID - Air Tank - Fan/Auger - RETURN	1
73	N29964	Tag - Hose ID - Air Tank - Fan/Auger - CASE DRAIN	1
74	S29958	Tag - Hose ID - Depth Control - RAISE	2
75	S29959	Tag - Hose ID - Depth Control - LOWER	2
76	S29960	Tag - Hose ID - Wing Lift - FOLD	1
77	S29961	Tag - Hose ID - Wing Lift - UNFOLD	1
78	N34362	Tag - Hose ID - Three Point Hitch - RAISE	1
79	N34363	Tag - Hose ID - Three Point Hitch - LOWER	1
80	N34364	Tag - Hose ID - Wheel Marker	2
81	N34052	Mounting Plate - Control Valve	1
	N19031	Decal - “Auger/Fan” (Not Shown)	1
	N34026	Decal - “Auger/Aux Hyd” (Not Shown)	1
	N34288	Decal - “Fold/Unfold” (Not Shown)	1

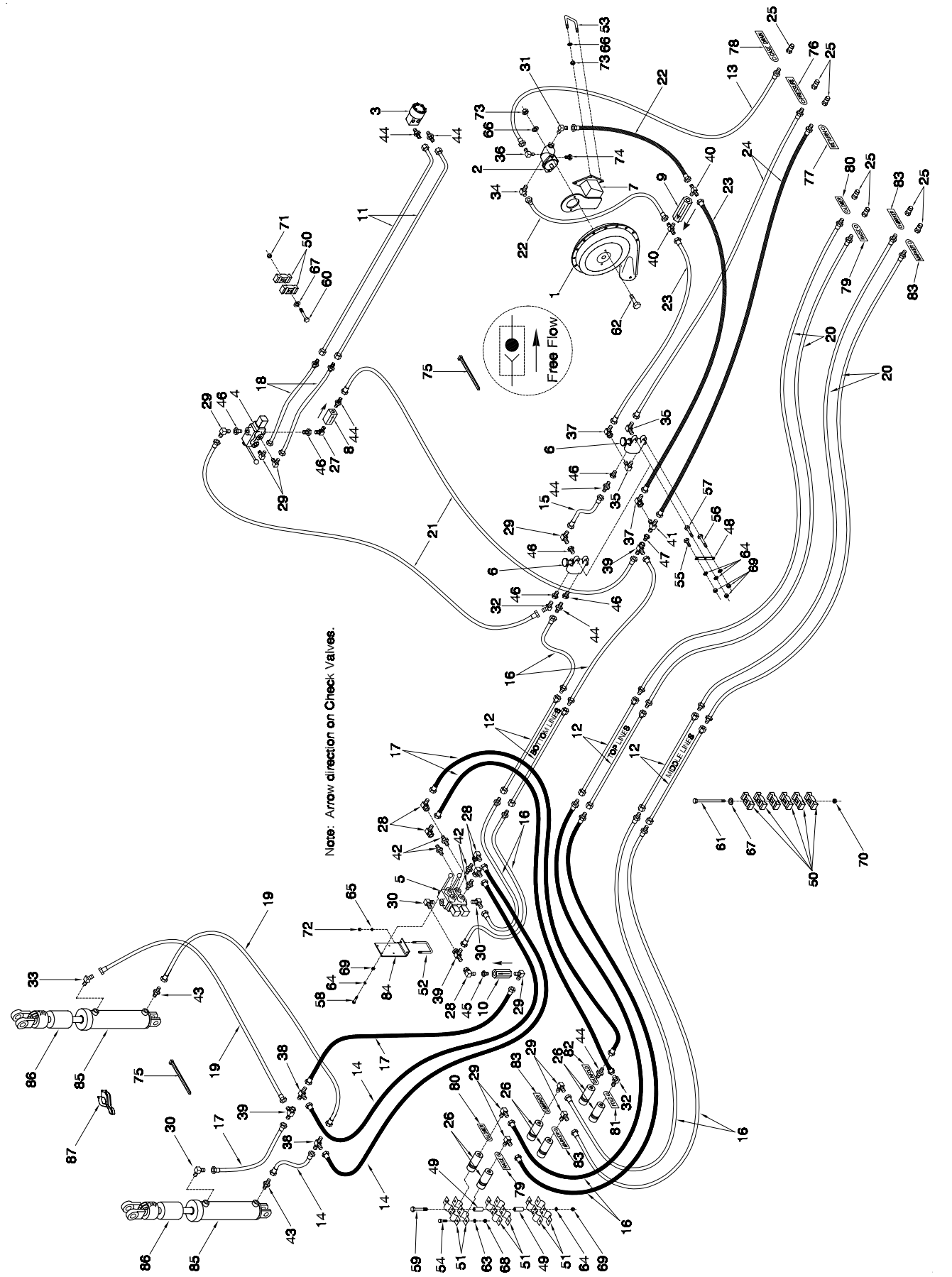
Free Flow
Note: Arrow direction on Check Valves.
BOTTOM LINES
TOP LINES
HYDRAULIC LINES

Fan & Auger Drives - Xpress Tow Between Hydraulic Drive (From November 2004)

Item	Part No.	Description	Qty
1	N16263	Fan (See pg 7-2)	1
2	N29372	Hydraulic Motor - Rexroth - 12cc	1
	N25508	Seal Kit for Rexroth Motors - 12cc	
	N25507	Seal Only for Rexroth Motors 12cc	
3	N15982	Orbit Motor	1
	N16731	Seal Kit for N15982	
	N25319	Shaft for N15982	
4	N15024	Control Valve	1
	N31605	Seal Kit for N15024	
	N24595	Handle for N15024	
5	N34048	Control Valve - Dbl Spool	1
	N34087	Seal Kit for N34048	
	N34051	Handle for N34048	
6	N19340	Selector Valve - 3/4 FNPT	2
	N31603	Seal Kit for N19340	
	C36358	Knob for N19340	
7	N31032	Fan Mount Bracket 7180	1
	N31033	Fan Mount Bracket 7240	1
8	N15023	Check Valve - 1/2 FNPT	1
9	N16399	Check Valve - 0 PSI - 1 1/16-12 ORB	1
10	H-5545	Check Valve - 1/2 FNPT	1
11	F-4560	Oil Line - 5/8 x 99 Lg w/90 Bend	2
12	C-4367	Oil Line - 5/8 x 80 Lg (7180)	6
	C-4369	Oil Line - 5/8 x 96 Lg (7240)	6
13	N16181	Hyd Hose - 3/8 x 156 Lg w/9/16-18 FJIC x 1/2 MNPT	1
14	N34366	Hyd Hose - 1/2 x 12 Lg w/7/8-14 FJIC	3
15	C-4383	Hyd Hose - 1/2 x 20 Lg w/7/8-14 FJIC	1
16	C-4385	Hyd Hose - 1/2 x 24 Lg w/7/8-14 MJIC x 7/8-14 FJIC	8
17	C-4468	Hyd Hose - 1/2 x 24 Lg w/7/8-14 FJIC x 7/8-14 FJIC	4
18	C-4387	Hyd Hose - 1/2 x 36 Lg w/7/8-14 MJIC x 7/8-14 FJIC (7180)	2
	C-4389	Hyd Hose - 1/2 x 60 Lg w/7/8-14 MJIC x 7/8-14 FJIC (7240)	2
19	C18779	Hyd Hose - 1/2 x 72 Lg w/7/8-14 FJIC x 7/8-14 FJIC	2
20	N19548	Hyd Hose - 1/2 x 132 Lg w/7/8-14 MJIC x 1/2 MNPT	4
21	N19365	Hyd Hose - 1/2 x 140 Lg w/7/8-14 MJIC x 7/8-14 FJIC (7180)	2
	N21721	Hyd Hose - 1/2 x 180 Lg w/7/8-14 MJIC x 7/8-14 FJIC (7240)	2
22	N25644	Hyd Hose - 3/4 x 35 Lg w/1 1/16-12 FJIC	2
23	N25644	Hyd Hose - 3/4 x 35 Lg w/1 1/16-12 FJIC	2
24	N16454	Hyd Hose - 3/4 x 130 w/1 1/16-12 FJIC x 1/2 MNPT	2
25	C-817	Male Pioneer Tip - 1/2 FNPT	7
26	C-818	Pioneer Coupler - 1/2 FNPT	6
27	N15033	90 Male Elbow - 1/2 MNPT	1
28	K-5806	90 Elbow - 7/8-14 FJIC x 7/8-14 MJIC	5
29	C-4400	90 Male Elbow - 7/8-14 MJIC x 1/2 MNPT	9
30	C24585	90 Male Elbow - 7/8-14 MJIC x 3/4-16 ORB	3
31	N16359	90 Male Elbow - 1 1/16-12 MJIC x 1 1/16-12 ORB	1
32	C-4402	45 Male Elbow - 1/2 MNPT x 7/8-14 MJIC	2
33	C26333	45 Male Elbow - 3/4-16 MORB x 7/8-14 MJIC	1
34	N31096	45 Male Elbow - 1 1/16-12 MJIC x 1 1/16-12 ORB	1
35	N19341	90 Male Elbow - 1 1/16-12 MJIC x 3/4 MNPT	2
36	N16143	90 Male Elbow - 9/16-18 MJIC x 9/16-18 ORB	1
37	N21189	90 Male Elbow - 1 1/16-12 MJIC x 1 1/16-12 FJIC	2
38	C-4394	Male Tee - (3) 7/8-14 MJIC	2
39	H18746	Swivel Tee - (2) 7/8-14 MJIC x 7/8-14 FJIC	3
40	N16388	Male Tee - (2) 1 1/16-12 JIC x (1) 1 1/16-12 ORB	2
41	N19549	Male Tee - (3) 1 1/16-12 JIC	1
42	N34047	Connector - 7/8-14 MJIC x 9/16-18 MORB	4
43	C14840	Connector - 7/8-14 MJIC x 3/4-16 MORB	2
44	C-4399	Connector - 7/8-14 MJIC x 1/2 MNPT	5
45	N40509	Connector - 7/8-14 FJIC x 1/2 MNPT	1
46	N15032	Reducer - 3/4 MNPT x 1/2 FNPT	6
47	N19337	Reducer - 7/8-14 MJIC x 1 1/16-12 FJIC	1
48	N19713	Strap	2
49	N19458	Spacer - 2	4
50	C-4698	Nylon Oil Line Clamp	16
51	N16608	Coupler Clamp - Female Pioneer	6
52	N15098	U-Bolt - 3/8 x 4 x 5	1
53	H21351	U-Bolt - 1/2 x 6 1/16 x 5 1/16 (7180)	2
	N31034	U-Bolt - 1/2 x 8 1/16 x 5 1/16 (7240)	2
54	W-469	Hex Bolt - 1/4 x 3/4 Lg	6
55	F-1767	Hex Bolt - 5/16 x 3/4 Lg	2
56	C-3035	Hex Bolt - 5/16 x 1 3/4 Lg	2
57	S-1303	Hex Bolt - 5/16 x 2 Lg	2
58	S-1302	Hex Bolt - 5/16 x 2 1/2 Lg	3
59	N31314	Hex Bolt - 5/16 x 5 1/2 Lg	2
60	W-479	Hex Bolt - 3/8 x 2 1/4 Lg	2
61	C-3664	Hex Bolt - 3/8 x 5 Lg	2
62	S-1189	Hex Bolt - 1/2 x 1 3/4 Lg	2
63	W-521	Lockwasher - 1/4	8
64	W-522	Lockwasher - 5/16	13
65	W-523	Lockwasher - 3/8	2
66	W-525	Lockwasher - 1/2	6
67	W-538	Flatwasher - 3/8	4
68	W-512	Hex Nut - 1/4	8
69	W-513	Hex Nut - 5/16	13
70	M-3388	Locknut - 3/8 Unitorque	2
71	D-5279	Serrated Locknut - 3/8	2
72	W-514	Hex Nut - 3/8	2
73	W-516	Hex Nut - 1/2	6
74	N16621	Plug - 9/16-18 UNF ORB	1
75	D-4838	Nylon Tie Strap (black) - 14 1/2 Lg	12
76	N29962	Tag - Hose ID - Air Tank - Fan/Auger - PRESSURE	1
77	N29963	Tag - Hose ID - Air Tank - Fan/Auger - RETURN	1
78	N29964	Tag - Hose ID -Air Tank- Fan/Auger - CASE DRAIN	1
79	S29958	Tag - Hose ID - Depth Control - RAISE	2
80	S29959	Tag - Hose ID - Depth Control - LOWER	2
81	S29960	Tag - Hose ID - Wing Lift - FOLD	1
82	S29961	Tag - Hose ID - Wing Lift - UNFOLD	1
83	N34364	Tag - Hose ID - Wheel Marker	4
84	N34052	Mounting Plate - Control Valve	1
85	C26300	Cylinder - 4 x 12 Lg	2
86	N32069	Spacer - Stroke Control 1.375 ID (Aluminum)	2
87	S25999	Spacer - Cylinder Stroke (Aluminum) Not included with cylin	2
	N19031	Decal - “Auger/Fan” (Not Shown)	1
	N34026	Decal - “Auger/Aux Hyd” (Not Shown)	1
	N34288	Decal - “Fold/Unfold” (Not Shown)	1

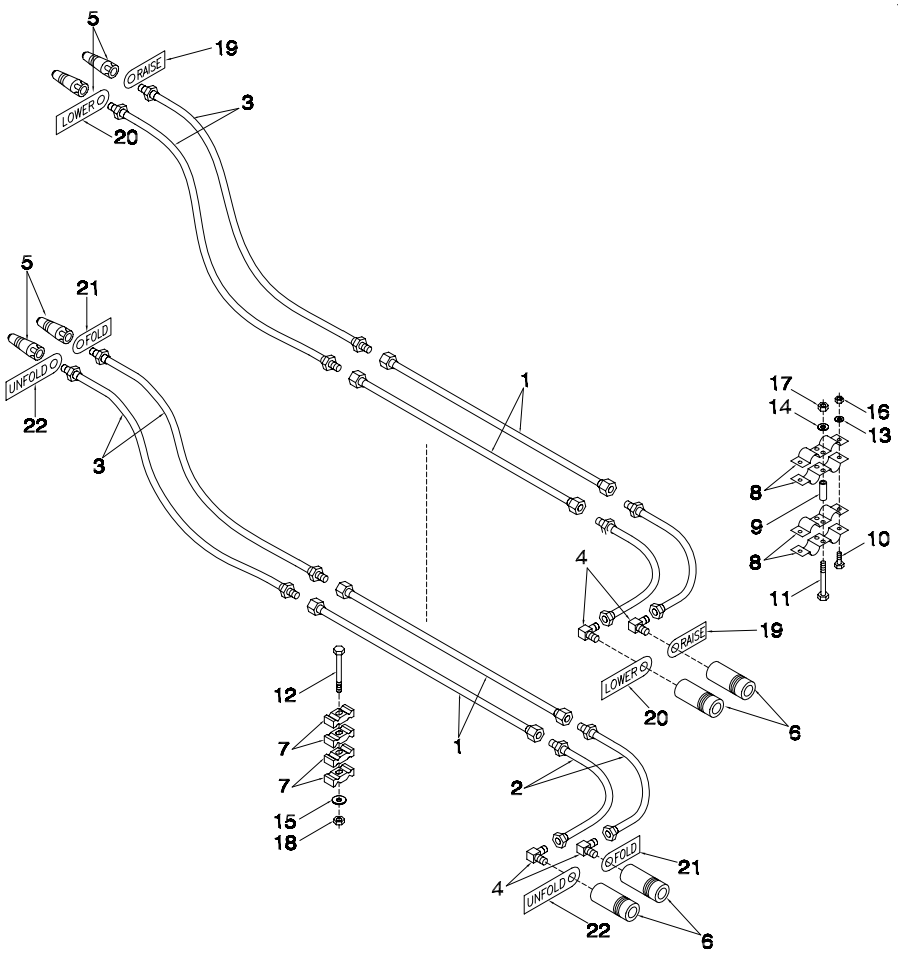

Item	Part No.	Description	Qty
1	C-4367	Oil Line - 5/8 x 80 Lg 7180	4
	C-4369	Oil Line - 5/8 x 96 Lg 7240 / 7252	4
2	C-4385	Hyd Hose - 1/2 x 24 Lg w/7/8-14 MJIC x 7/8-14 FJIC	4
3	N19548	Hyd Hose - 1/2 x 132 Lg w/7/8-14 MJIC x 1/2 MNPT	4
4	C-4400	90 Elbow - 7/8-14 MJIC x 1/2 MNPT	4
5	C-817	Male Pioneer Tip - 1/2 FNPT	4
6	C-818	Pioneer Coupler - 1/2 FNPT	4
7	C-4698	Nylon Oil Line Clamp	8
8	N16608	Coupler Clamp - Female Pioneer	4
9	N19458	Spacer - 2	2
10	W-469	Hex Bolt - 1/4 x 3/4 Lg	4
11	N28332	Hex Bolt - 5/16 x 3 1/2 Lg	2
12	C-1550	Hex Bolt - 3/8 x 4 Lg	2
13	W-521	Lockwasher - 1/4	4
14	W-522	Lockwasher - 5/16	2
15	W-538	Flatwasher - 3/8	2
16	W-512	Hex Nut - 1/4	4
17	W-513	Hex Nut - 5/16	2
18	M-3388	Locknut - 3/8 Unitorque	2
19	S29958	Tag - Hose ID - Depth Control - RAISE	2
20	S29959	Tag - Hose ID - Depth Control - LOWER	2
21	S29960	Tag - Hose ID - Wing Lift - FOLD	2
22	S29961	Tag - Hose ID - Wing Lift - UNFOLD	2

Section 6:
Auger

Section Contents

7130 / 7180 - 7 Auger 6-2
7180 - Front Latch Auger 6-4
7240 / 7300 - 7 & 8 Auger 6-6
7240 - 7 Front Latch Auger 6-10
7240 - 8 Front Latch Auger 6-12
7252 - 7 Auger 6-14

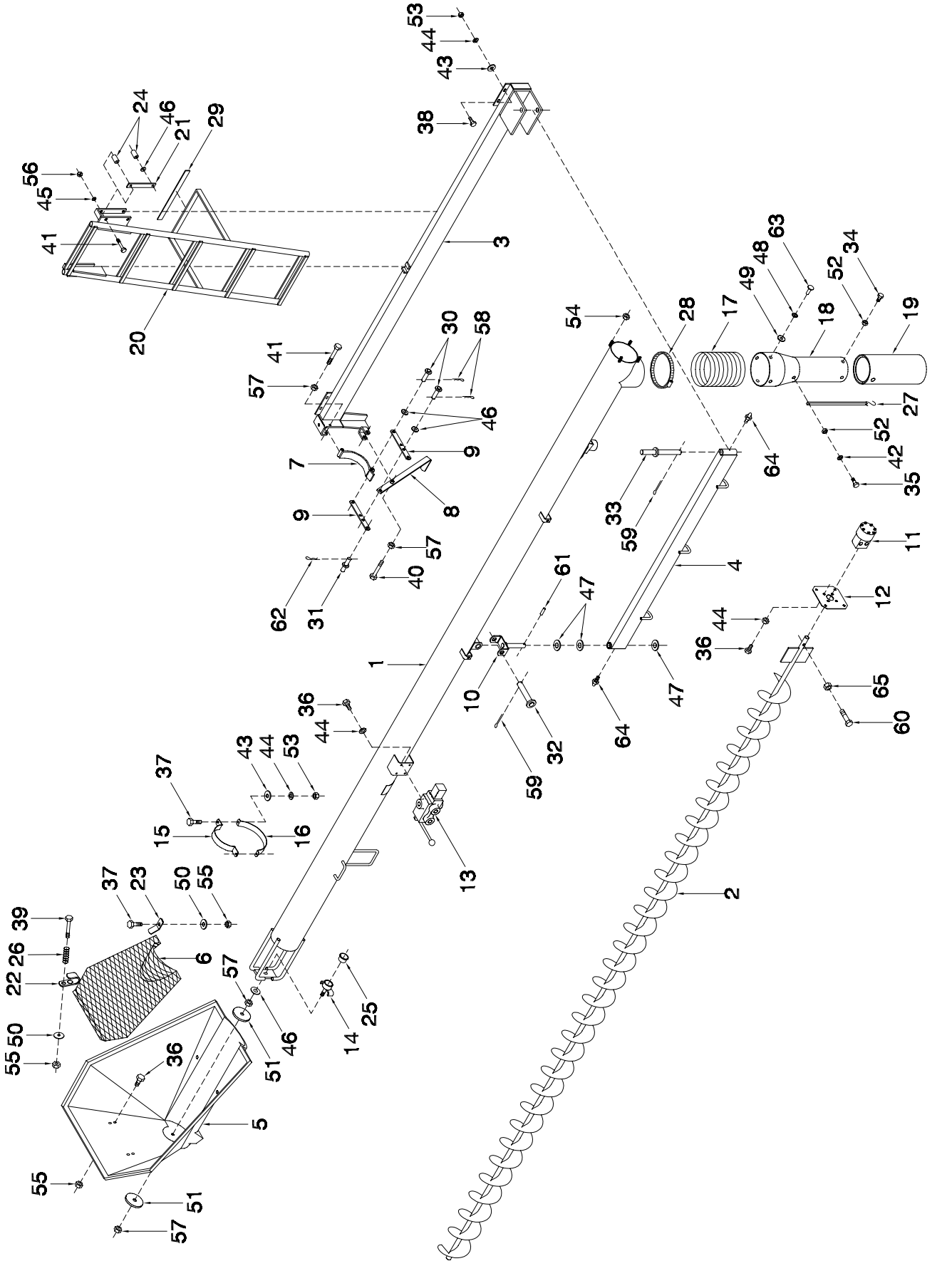

Auger - 7130 / 7180 - 7 Auger

Item	Part No.	Description	Qty
1	N27639	Auger Housing - 7 x 204 Lg 7130	1
	N27659	Auger Housing - 7 x 222 Lg 7180	1
2	N19083	Flyteing - 7 x 201 1/2 Lg 7130	1
	N25544	Flyteing - 7 x 219 1/2 Lg 7180	1
	N21077	Brush Flyteing - (Not Shown) 7130 (Optional)	1
		(Order Through Wholegoods)	1
	N21079	Brush Flyteing - (Not Shown) 7180 (Optional)	1
		(Order Through Wholegoods)	1
3	N27645	Auger Mount Bracket	1
4	N27680	Auger Arm - 63 1/2	1
5	N19784	Auger Hopper - 44	1
6	N31020	Screen(1998 to present)	1
	N19788	Screen(Prior to1997)	1
	N31019	Fine Screen (Not Shown)(1998 to present)(Optional)	1
	N27708	Fine Screen (Not Shown)(Prior to 1997)(Optional)	1
7	N28915	Cradle - 7	1
8	N33553	Handle w/Grip	1
	N32769	Grip for N33553	
	N19737	Handle for N33553	
9	N19736	Link	2
10	N19195	Saddle - Auger Pivot	1
11	N15982	Orbit Motor	1
	N16731	Seal Kit for N15982	
	N25319	Shaft for N15982	
12	N19480	Mount Plate	1
13	N15024	Control Valve	1
	N31605	Seal Kit for N15024	1
	N24595	Handle for N15024	1
14	N22809	Bearing Support	1
15	N21293	Strap - Upper - 3 1/2	1
16	N21294	Strap - Lower - 4 3/4	1
17	N22802	Hose - Flex - 7 Dia x 12 Lg	1
18	N22799	Auger Spout	1
19	N24421	Auger Spout - Extension	1
20	N27750	Ladder - Auger Access 7130	1
	N27755	Ladder - Auger Access 7180	1
21	N27761	Wear Plate - Ladder	2
22	N27705	Latch - Auger Screen - Lower	2
23	N27706	Latch - Auger Screen - Upper	2
24	N27759	Bushing - 3/4 OD x 1 7/8 Lg	4
25	C22785	Bushing (Blue) - 1 5/8 OD x 3/4 Lg	1
26	N15045	Spring - 0.59 OD x 1 1/4 Lg	2
27	N19777	Tie Down Strap - 15 - Rubber	1
28	N15462	Hose Clamp - 8 Dia	1
29	N19449	Seal Strip - 3/8 x 1 x 15 Lg (Bulk/ft)	1
30	BW-8	Pin - 1/2 x 1 1/32 UL	2
31	N19745	Lock Pin - 1/2 x 1 1/32 UL	1
32	N17217	Pin - 1 x 4 3/4 UL	1
33	N27700	Pin - Auger Pivot - 1 Dia	1
34	W-469	Hex Bolt - 1/4 x 3/4 Lg	3
35	W-470	Hex Bolt - 1/4 x 1 1/4 Lg	1
36	W-867	Hex Bolt - 3/8 x 3/4 Lg	10
37	W-475	Hex Bolt - 3/8 x 1 Lg	4
38	W-187	Hex Bolt - 3/8 x 1 1/4 Lg	8
39	W-478	Hex Bolt - 3/8 x 2 Lg	2
40	W-492	Hex Bolt - 1/2 x 3 Lg	1
41	W-493	Hex Bolt - 1/2 x 3 1/2 Lg	5
42	S-1198	Flatwasher - 1/4	1
43	W-538	Flatwasher - 3/8	10
44	W-523	Lockwasher - 3/8	18
45	W-525	Lockwasher - 1/2	4
46	W-539	Washer - 17/32 ID x 1 3/8 OD x 12 Ga	4
47	D10803	Flatwasher - 1	3
48	D-5487	Outside Washer - 1/2 OD x 3/16 ID	4
49	D10788	Inside Washer - 7/8 OD x 3/16 ID	4
50	W14504	Flatwasher - 1 1/2 OD	4
51	N17232	Flatwasher - 4 1/8 OD	2
52	N22778	Locknut - 1/4	4
53	W-514	Hex Nut 3/8	10
54	D-5279	Serrated Locknut - 3/8	4
55	M-3388	Locknut - 3/8 Unitorque	6
56	W-516	Hex Nut - 1/2	4
57	F-3405	Locknut - 1/2 Unitorque	3
58	W-907	Cotter Pin - 5/32 x 3/4 Lg	2
59	W-535	Cotter Pin - 1/4 x 1 1/2 Lg	2
60	S-1303	Hex Bolt - 5/16 x 2 Lg	1
61	J12281	Spiral Pin - 5/16 x 2 Lg	1
62	W-131	Hairpin - #9 - 0.148 x 3 5/16 Lg	1
63	D-4945	Pop Rivet - 3/16 x 3/8 GRIP	4
64	S-752	Grease Zerk - 1/4 Straight	2
65	D-5278	Serrated Locknut - 5/16	1
	N34477	Reflector - AMBER (Not Shown)	2
	N19031	Decal - Information (Not Shown)	1
	N19032	Decal - Information (Not Shown)	1
	N19033	Decal - Danger (Not Shown)	1
	N19034	Decal - Danger (Not Shown)	1
	N19481	Spout Assembly (Includes Items 17, 18, 48, 49 & 63)	
	N19778	Extendible Spout Assembly (Optional) (Includes Items 17, 18, 19, 27, 34, 35, 42, 48, 49, 52 & 63)	

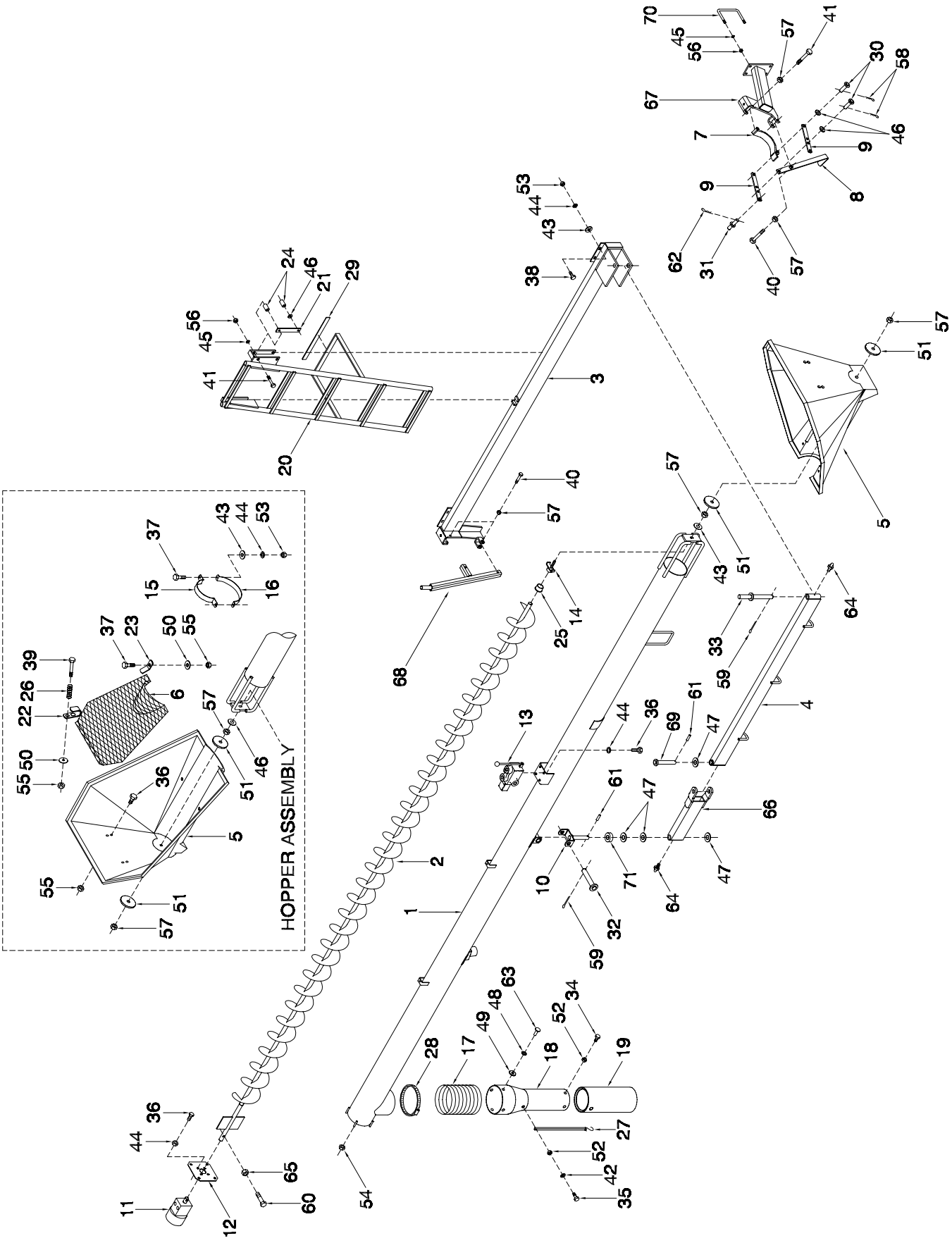
HOPPER ASSEMBLY

Auger - 7180 - 7 Front Latch Auger

Item	Part No.	Description	Qty
1	N34049	Auger Housing - 7 x 222 Lg 7180	1
2	N25544	Flyteing - 7 x 219 1/2 Lg 7180	1
	N21079	Brush Flyteing - (Not Shown) 7180 (Optional)	1
		(Order Through Wholegoods)	1
3	N27645	Auger Mount Bracket	1
4	N27680	Auger Arm - 63 1/2	1
5	N19784	Auger Hopper - 44	1
6	N31020	Screen	1
7	N28915	Cradle - 7	1
8	N33553	Handle w/Grip	1
	N32769	Grip for N33553	
	N19737	Handle for N33553	
9	N19736	Link	2
10	N19195	Saddle - Auger Pivot	1
11	N15982	Orbit Motor	1
	N16731	Seal kit for N15982	
	N25319	Shaft for N15982	
12	N19480	Mount Plate	1
13	N15024	Control Valve	1
	N31605	Seal Kit for N15204	1
	N24595	Handle for N15204	1
14	N22809	Bearing Support	1
15	N21293	Strap - Upper - 3 1/2	1
16	N21294	Strap - Lower - 4 3/4	1
17	N22802	Hose - Flex - 7 Dia x 12 Lg	1
18	N22799	Auger Spout	1
19	N24421	Auger Spout - Extension	1
20	N27755	Ladder - Auger Access 7180	1
21	N27761	Wear Plate - Ladder	2
22	N27705	Latch - Auger Screen - Lower	2
23	N27706	Latch - Auger Screen - Upper	2
24	N27759	Bushing - 3/4 OD x 1 7/8 Lg	4
25	C22785	Bushing (Blue) - 1 5/8 OD x 3/4 Lg	1
26	N15045	Spring - 0.59 OD x 1 1/4 Lg	2
27	N19777	Tie Down Strap - 15 - Rubber	1
28	N15462	Hose Clamp - 8 Dia	1
29	N19449	Seal Strip - 3/8 x 1 x 15 (Bulk/ft)	1
30	BW-8	Pin - 1/2 x 1 1/32 UL	2
31	N19745	Lock Pin - 1/2 x 1 1/32 UL	1
32	N17217	Pin - 1 x 4 3/4 UL	1
33	N27700	Pin - Auger Pivot - 1 Dia	1
34	W-469	Hex Bolt - 1/4 x 3/4 Lg	3
35	W-470	Hex Bolt - 1/4 x 1 1/4 Lg	1
36	W-867	Hex Bolt - 3/8 x 3/4 Lg	10
37	W-475	Hex Bolt - 3/8 x 1 Lg	4
38	W-187	Hex Bolt - 3/8 x 1 1/4 Lg	8
39	W-478	Hex Bolt - 3/8 x 2 Lg	2
40	W-492	Hex Bolt - 1/2 x 3 Lg	3
41	W-495	Hex Bolt - 1/2 x 4 Lg	5
42	S-1198	Flatwasher - 1/4	1
43	W-538	Flatwasher - 3/8	10
44	W-523	Lockwasher - 3/8	18
45	W-525	Lockwasher - 1/2	8
46	W-539	Washer - 17/32 ID x 1 3/8 OD x 12 Ga	4
47	D10803	Flatwasher - 1	4
48	D-5487	Outside Washer - 1/2 OD x 3/16 ID	4
49	D10788	Inside Washer - 7/8 OD x 3/16 ID	4
50	W14504	Flatwasher - 1 1/2 OD	4
51	N17232	Flatwasher - 4 1/8 OD	2
52	N22778	Locknut - 1/4	4
53	W-514	Hex Nut 3/8	10
54	D-5279	Serrated Locknut - 3/8	4
55	M-3388	Locknut - 3/8 Unitorque	6
56	W-516	Hex Nut - 1/2	8
57	F-3405	Locknut - 1/2 Unitorque	5
58	W-907	Cotter Pin - 5/32 x 3/4 Lg	2
59	W-535	Cotter Pin - 1/4 x 1 1/2 Lg	2
60	S-1303	Hex Bolt - 5/16 x 2 Lg	1
61	J12281	Spiral Pin - 5/16 x 2 Lg	2
62	W-131	Hairpin - #9 - 0.148 x 3 5/16 Lg	1
63	D-4945	Pop Rivet - 3/16 x 3/8 GRIP	4
64	S-752	Grease Zerk - 1/4 Straight	2
65	D-5278	Serrated Locknut - 5/16	1
66	N34020	Outer Auger Arm	1
67	N34000	Auger Latch Support	1
68	N34005	Auger Support	1
69	N31628	Pin - 1 x 5 29/32	1
70	H21351	U-Bolt - 1/2 x 6 x 5	2
71	N19192	Bushing - 1 ID x 1 1/2 OD x 1/2 Lg	1
	N34477	Reflector - AMBER (Not Shown)	2
	N19031	Decal - Information (Not Shown)	1
	N19032	Decal - Information (Not Shown)	1
	N19033	Decal - Danger (Not Shown)	1
	N19034	Decal - Danger (Not Shown)	1
	N19481	Spout Assembly (Includes Items 17, 18, 48, 49 & 63)	
	N19778	Extendible Spout Assembly (Optional) (Includes Items 17, 18, 19, 27, 34, 35, 42, 48, 49, 52 & 63)	

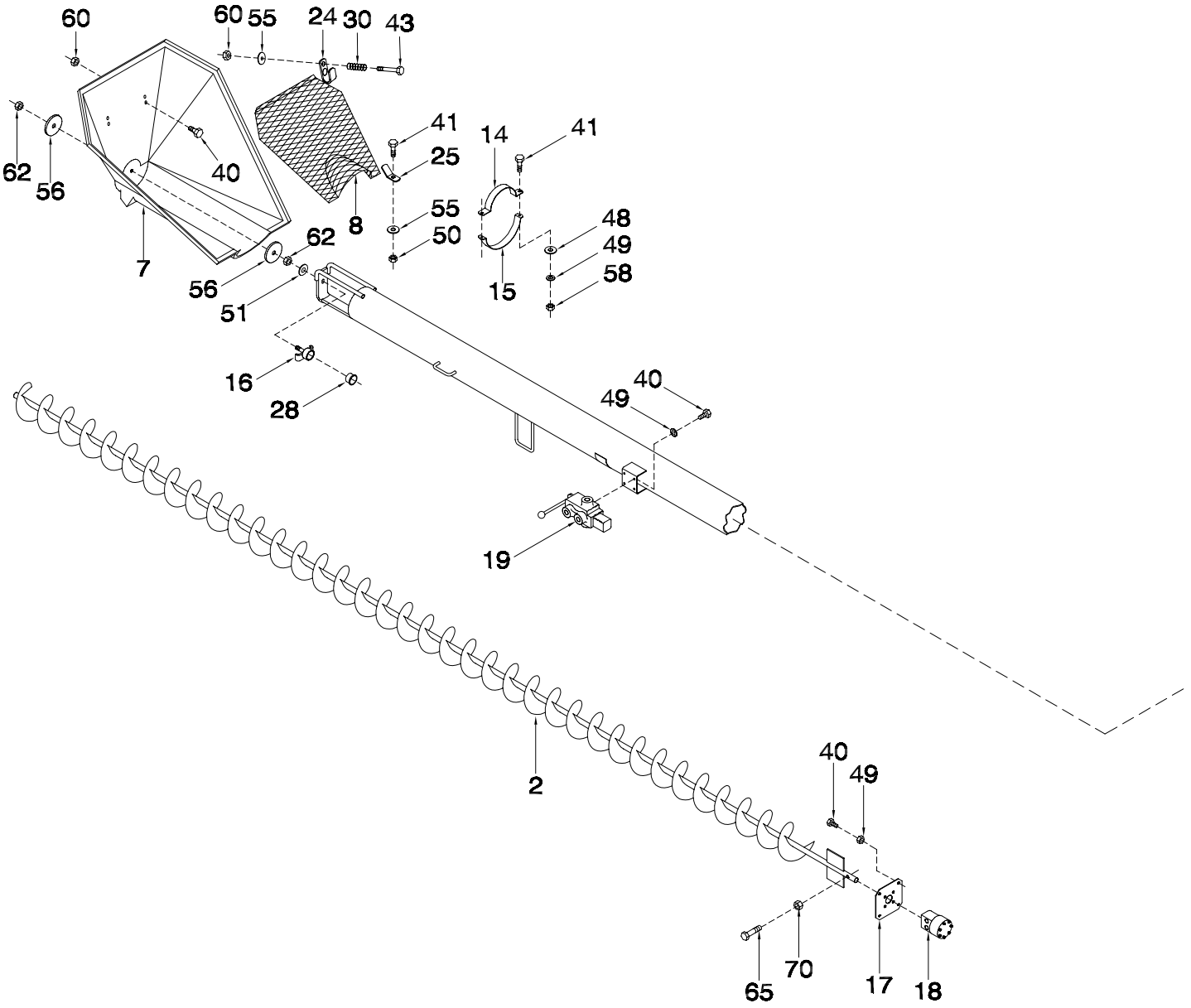
60
60
55
24
30
43
62
56
40
41
25
8
55
50
14
41
48
49
58
15
7
62
56
51
16
28
40
49
19
2
40
49
65
70
17
18

PRIOR TO:
7240 Tow Between: SERIAL # 7239802156
7240 Tow Behind: SERIAL # 7249801210
7300 Tow Between: SERIAL # 7339803041
7300 Tow Behind: SERIAL # 7309803190

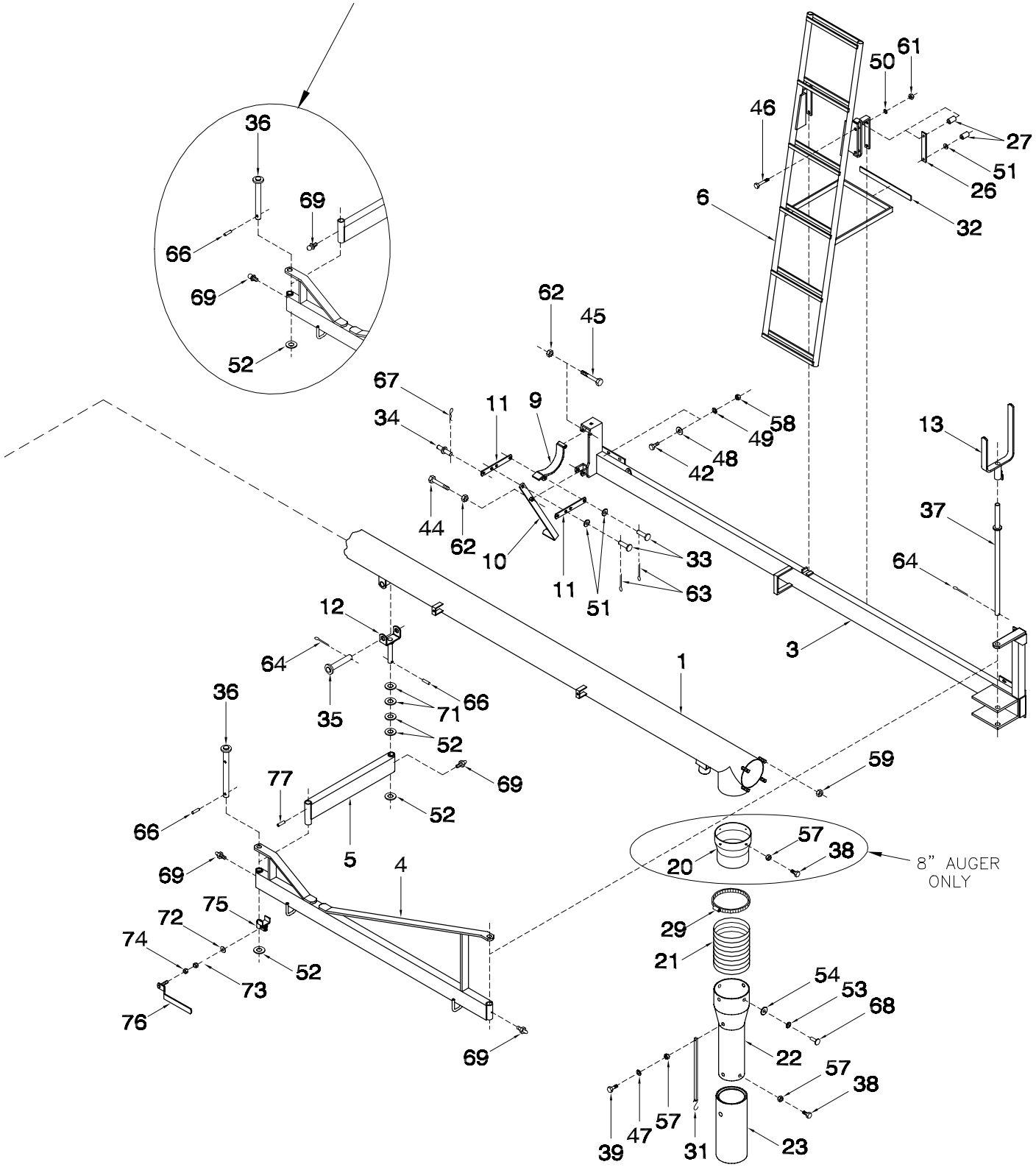

Auger - 7240 / 7300 - 7 & 8 Auger

Item	Part No.	Description	No: Used 7"	No: Used 8"
1	N27669	Auger Housing - 7 x 240 Lg	1	
	N27689	Auger Housing - 8 x 240 Lg	0	1
2	N27675	Flyteing - 7 x 237 1/2 Lg	1	0
	N27695	Flyteing - 8 x 237 1/2 Lg	0	1
	N27665	Brush Flyteing - 7 x 237 1/2 Lg (Optional - Not Shown) (Wholegoods only)	1	0
	N27685	Brush Flyteing - 8 x 237 1/2 Lg (Optional - Not Shown) (Wholegoods only)	0	1
3	N27650	Auger Mount Bracket - Prior to June 2007	1	1
	N44080	Auger Mount Bracket - June 2007	1	1
4	N21735	Arm - Auger - 72	1	1
5	N28328	Arm - Auger - 26	1	1
6	N27760	Ladder - Auger Access 7240	1	1
	N27765	Ladder - Auger Access 7300	1	1
7	N19784	Auger Hopper - 44	1	1
8	N31020	Screen(1998 to present)	1	1
	N19788	Screen(Prior to1997)	1	1
	N31019	Fine Screen (Not Shown)(1998 to present) (Optional)	1	1
	N27708	Fine Screen (Not Shown)(Prior to 1997) (Optional)	1	1
9	N28915	Cradle - Auger - 7	1	0
	N28920	Cradle - Auger - 8	0	1
10	N34251	Handle w/grip	1	1
	N32769	Grip for N34251		
	N29737	Handle for N34251		
11	N19736	Link	2	2
12	N29395	Saddle - Auger Pivot	1	1
13	N28577	Saddle - Auger Pivot - 7	1	0
	N28575	Saddle - Auger Pivot - 8	0	1
14	N21293	Strap - Upper Auger Hopper - 3 1/2	1	0
	N25668	Strap - Upper Auger Hopper - 4	0	1
15	N21294	Strap - Lower Auger Hopper - 4 3/4	1	1
16	N22809	Pin - Auger Bearing Support	1	1
17	N19480	Plate - Mount	1	0
	N25753	Plate - Mount	0	1
18	N15982	Orbit Motor	1	0
	N16731	Seal Kit for N15982		
	N25319	Shaft for N15982		
	N25741	Orbit Motor	0	1
	K12962	Seal Kit for N25741		
19	N15024	Control Valve	1	1
	N31605	Seal Kit for N15204	1	1
	N24595	Handle for N15204	1	1
20	N21076	Reducer - 8 Auger Spout (8 Auger ONLY)	0	1
21	N22802	Flex Hose - 7 Dia x 12 Lg	1	1
22	N22799	Auger Spout	1	1
23	N24421	Auger Spout - Extension	1	1
24	N27705	Latch - Auger Screen - Lower	2	2
25	N27706	Latch - Auger Screen - Upper	2	2
26	N27761	Wear Plate - Ladder	2	2
27	N27759	Bushing - 3/4 OD x 1 7/8 Lg	4	4
28	C22785	Bushing - 1 5/8 OD x 3/4 Lg (Blue)	1	1
29	N15462	Hose Clamp - 8 Dia	1	1
30	N15045	Spring - 0.59 OD x 1 1/4 Lg	2	2
31	N19777	Tie Down Strap - 15 - Rubber	1	1
32	N19449	Seal Strip - 3/8 x 1 x 15 (Bulk/ft)	1	1
33	BW-8	Pin - 1/2 x 1 1/32 UL	2	2
34	N19745	Lock Pin - 1/2 x 1 1/32 UL	1	1
35	N17217	Pin - 1 x 4 3/4 UL	1	1
36	N25595	Pin - Auger Pivot - 1 x 10 29/32 UL (Prior to June 1999)	1	1
	N31765	Pin - Auger Pivot - 1 x 12 23/32 UL (Current)	1	1
37	N28327	Pin - Auger Pivot - 1 x 22 7/8 UL	1	1
38	W-469	Hex Bolt - 1/4 x 3/4 Lg	3	7
39	W-470	Hex Bolt - 1/4 x 1 1/4 Lg	1	1

Auger - 7240 / 7300 - 7 & 8 Auger

Item	Part No.	Description	No: Used 7"	No: Used 8"
40	W-867	Hex Bolt - 3/8 x 3/4 Lg	10	10
41	W-475	Hex Bolt - 3/8 x 1 Lg	4	4
42	W-187	Hex Bolt - 3/8 x 1 1/4 Lg	8	8
43	W-478	Hex Bolt - 3/8 x 2 Lg	2	2
44	W-492	Hex Bolt - 1/2 x 3 Lg	1	1
45	W-493	Hex Bolt - 1/2 x 3 1/2 Lg	1	1
46	W-1575	Hex Bolt - 1/2 x 5 Lg	4	4
47	S-1198	Flatwasher - 1/4	1	1
48	W-538	Flatwasher - 3/8	10	10
49	W-523	Lockwasher - 3/8	18	18
50	W-525	Lockwasher - 1/2	4	4
51	W-539	Flatwasher - 17/32 ID x 1 3/8 OD x 12 Ga	4	4
52	D10803	Flatwasher - 1	4	4
53	D-5487	Outside Washer - 1/2 OD x 3/16 ID	4	4
54	D10788	Inside Washer - 7/8 OD x 3/16 ID	4	4
55	W14504	Flatwasher - 1 1/2 OD	4	4
56	N17232	Flatwasher - 4 1/8 OD	2	2
57	N22778	Locknut - 1/4 w/Nylon Insert	4	8
58	W-514	Hex Nut - 3/8	10	10
59	D-5279	Locknut - 3/8 Serrated	4	4
60	M-3388	Locknut - 3/8 Unitorque	6	6
61	W-516	Hex Nut -1/2	4	4
62	F-3405	Locknut - 1/2 Unitorque	3	3
63	W-907	Cotter Pin - 5/32 x 3/4 Lg	2	2
64	W-535	Cotter Pin - 1/4 x 1 1/2 Lg	2	2
65	S-1303	Hex Bolt - 5/16 x 2 lg	1	1
66	J12281	Spiral Pin - 5/16 x 2 Lg	2	2
67	W-131	Hair Pin - #9 - 0.148 x 3 5/16 Lg	1	1
68	D-4945	Pop Rivet - 3/16 x 3/8 GRIP	4	4
69	S-752	Grease Zerk - 1/4 Strait	3	3
70	D-5278	Locknut - 5/16 Serrated	1	1
71	N19192	Bushing - 1 ID x 1 1/2 OD x 1/2 Lg	2	2
72	W-793	Flatwasher - 5/8	1	1
73	W-517	Hex Nut - 5/8	1	1
74	C-1472	Jam Nut - 5/8	1	1
75	N31775	Lock - Auger Arm	1	1
76	N31763	Handle	1	1
77	N15983	Spiral Pin - 5/16 x 1 1/2 Lg	1	1
78	N31774	Decal - Information - Auger Arm Lock (Not Shown)	1	1
	N34477	Reflector - AMBER (Not Shown)	2	2
	N19031	Decal - Information (Not Shown)	1	1
	N19032	Decal - Information (Not Shown)	1	1
	N19033	Decal - Danger (Not Shown)	1	1
	N19034	Decal - Danger (Not Shown)	1	1
	N19020	Decal - Caution (Not Shown)	1	1
	N19778	Extendible Spout Assembly (Includes Items #21, 22, 23, 31, 38, 39, 47, 53, 54, 57 & 68)		
	N31768	Kit - Auger Arm Lock 7240/7300 (Includes 36, 52, 66, 72, 73, 74, 75, 76, 77 & 78)		

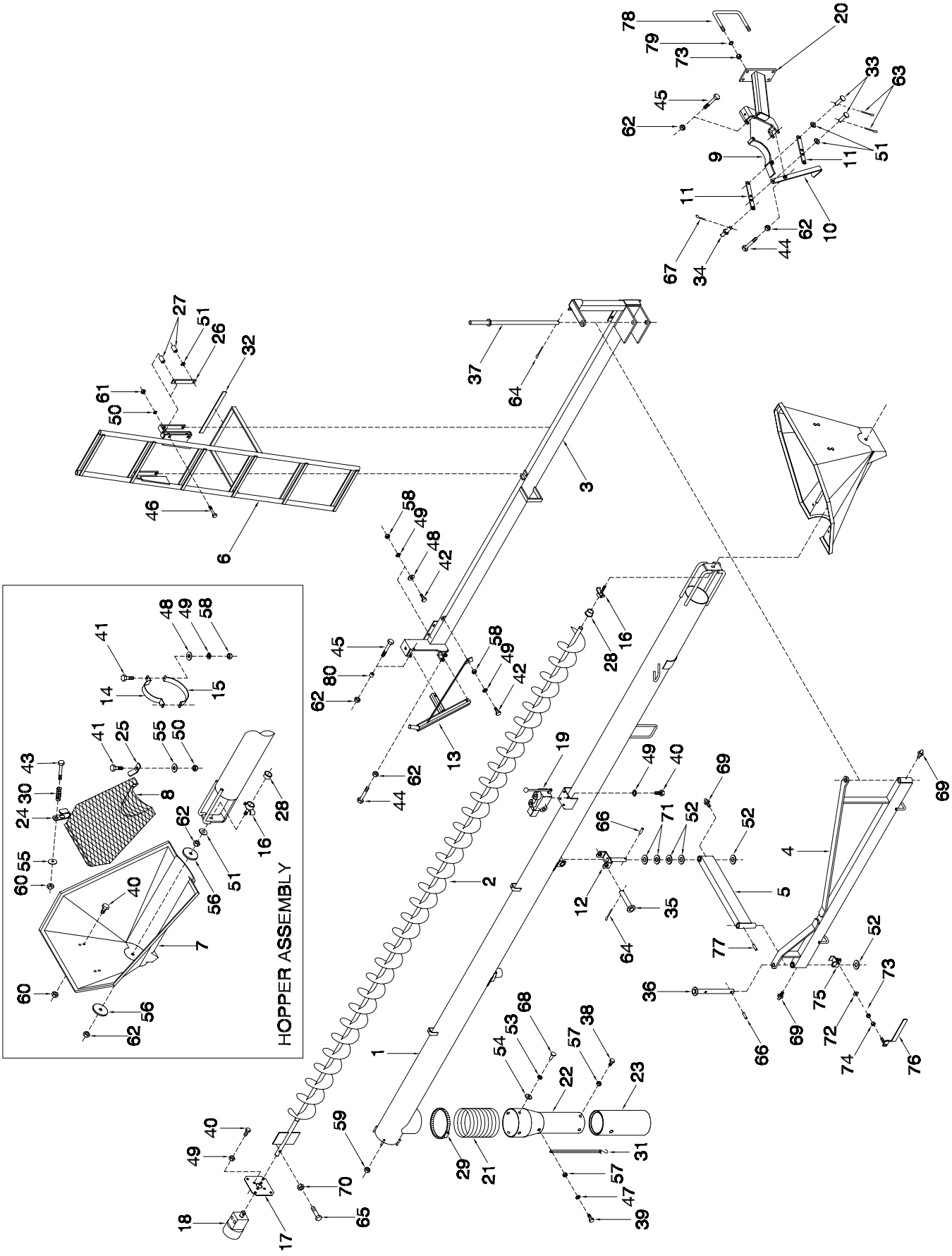
HOPPER ASSEMBLY

Auger - 7240 - 7 Front Latch Auger

Item	Part No.	Description	Qty
1	N34069	Auger Housing - 7 x 240 Lg	1
2	N27675	Flyteing - 7 x 237 1/2 Lg	1
3	N27650	Auger Mount Bracket	1
4	N21735	Arm - Auger - 72	1
5	N28328	Arm - Auger - 26	1
6	N27760	Ladder - Auger Access	1
7	N19784	Auger Hopper - 44	1
8	N31020	Screen	1
9	N34067	Cradle - Auger - 7	1
10	N33553	Handle w/grip	1
	N32769	Grip for N33553	1
	N19737	Handle for N33553	1
11	N19736	Link	2
12	N29395	Saddle - Auger Pivot	1
13	N34045	Auger Support	1
14	N21293	Strap - Upper Auger Hopper - 3 1/2	1
15	N21294	Strap - Lower Auger Hopper - 4 3/4	1
16	N22809	Pin - Auger Bearing Support	1
17	N19480	Plate - Mount	1
18	N15982	Orbit Motor	1
	N16731	Seal Kit for N15982	
	N25319	Shaft for N15982	
19	N15024	Control Valve	1
	N31605	Seal Kit for N15024	
	N24595	Handle for N15024	
20	N34041	Auger Latch Support	1
21	N22802	Flex Hose - 7 Dia x 12 Lg	1
22	N22799	Auger Spout	1
23	N24421	Auger Spout Extension	1
24	N27705	Latch - Auger Screen - Lower	2
25	N27706	Latch - Auger Screen - Upper	2
26	N27761	Wear Plate - Ladder	2
27	N27759	Bushing - 3/4 OD x 1 7/8 Lg	4
28	C22785	Bushing - 1 5/8 OD x 3/4 Lg (Blue)	1
29	N15462	Hose Clamp - 8 Dia	1
30	N15045	Spring - 0.59 OD x 1 1/4 Lg	1
31	N19777	Tie Down Strap - 15 - Rubber	1
32	N19449	Seal Strip - 3/8 x 1 x 15 (Bulk/ft)	1
33	BW-8	Pin - 1/2 x 1 1/32 UL	2
34	N19745	Lock Pin - 1/2 x 1 1/32 UL	1
35	N17217	Pin - 1 x 4 3/4 UL	1
36	N31765	Pin - Auger Pivot - 1 x 12 23/32 UL	1
37	N28327	Pin - Auger Pivot - 1 x 22 7/8 UL	1
38	W-469	Hex Bolt - 1/4 x 3/4 Lg	3
39	W-470	Hex Bolt - 1/4 x 1 1/4 Lg	1
40	W-867	Hex Bolt - 3/8 x 3/4 Lg	10
41	W-475	Hex Bolt - 3/8 x 1 Lg	4
42	W-187	Hex Bolt - 3/8 x 1 1/4 Lg	12
43	W-478	Hex Bolt - 3/8 x 2 Lg	9
44	W-492	Hex Bolt - 1/2 x 3 Lg	2
45	W-493	Hex Bolt - 1/2 x 3 1/2 Lg	2
46	W-1575	Hex Bolt - 1/2 x 5 Lg	2
47	S-1198	Flatwasher - 1/4	1
48	W-538	Flatwasher - 3/8	10
49	W-523	Lockwasher - 3/8	20
50	W-525	Lockwasher - 1/2	4
51	W-539	Flatwasher - 17/32 ID x 1 3/8 OD x 12 Ga	4
52	D10803	Flatwasher - 1	4
53	D-5487	Outside Washer - 1/2 OD x 3/16 ID	4
54	D10788	Inside Washer - 7/8 OD x 3/16 ID	4
55	W14504	Flatwasher - 1 1/2 OD	4
56	N17232	Flatwasher - 4 1/8 OD	2
57	N22778	Locknut - 1/4 w/Nylon Insert	4
58	W-514	Hex Nut - 3/8	12
59	D-5279	Locknut - 3/8 Serrated	4
60	M-3388	Locknut - 3/8 Unitorque	6
61	W-516	Hex Nut - 1/2	4
62	F-3405	Locknut - 1/2 Unitorque	5
63	W-907	Cotter Pin - 5/32 x 3/4 Lg	2
64	W-535	Cotter Pin - 1/4 x 1 1/2 Lg	2
65	S-1303	Hex Bolt - 5/16 x 2 Lg	1
66	J12281	Spiral Pin - 5/16 x 2 Lg	2
67	W-131	Hair Pin - #9 - 0.148 x 3 5/16 Lg	1
68	D-4945	Pop Rivet - 3/16 x 3/8 GRIP	4
69	S-752	Grease Zerk - 1/4 Straight	3
70	D-5278	Locknut - 5/16 Serrated	1
71	N19192	Bushing - 1 ID x 1 1/2 OD x 1/2 Lg	2
72	W-793	Flatwasher - 5/8	1
73	W-517	Hex Nut - 5/8	5
74	C-1472	Jam Nut - 5/8	1
75	N31775	Lock - Auger Arm	1
76	N31763	Handle	1
77	N15983	Spiral Pin - 5/16 x 1 1/2 Lg	1
78	C29610	U-Bolt - 5/8 x 8 x 5 1/2	2
79	W-526	Lockwasher - 5/8	4
80	N34072	Bushing - 5/8 ID x 1 OD x 5/8 Lg	1
	N34477	Reflector - AMBER (Not Shown)	2
	N19031	Decal - Information (Not Shown)	1
	N19032	Decal - Information (Not Shown)	1
	N19033	Decal - Danger (Not Shown)	1
	N19034	Decal - Danger (Not Shown)	1
	N31774	Decal - Information - Auger Arm Lock (Not Shown)	1
	N19020	Decal - Caution (Not Shown)	1

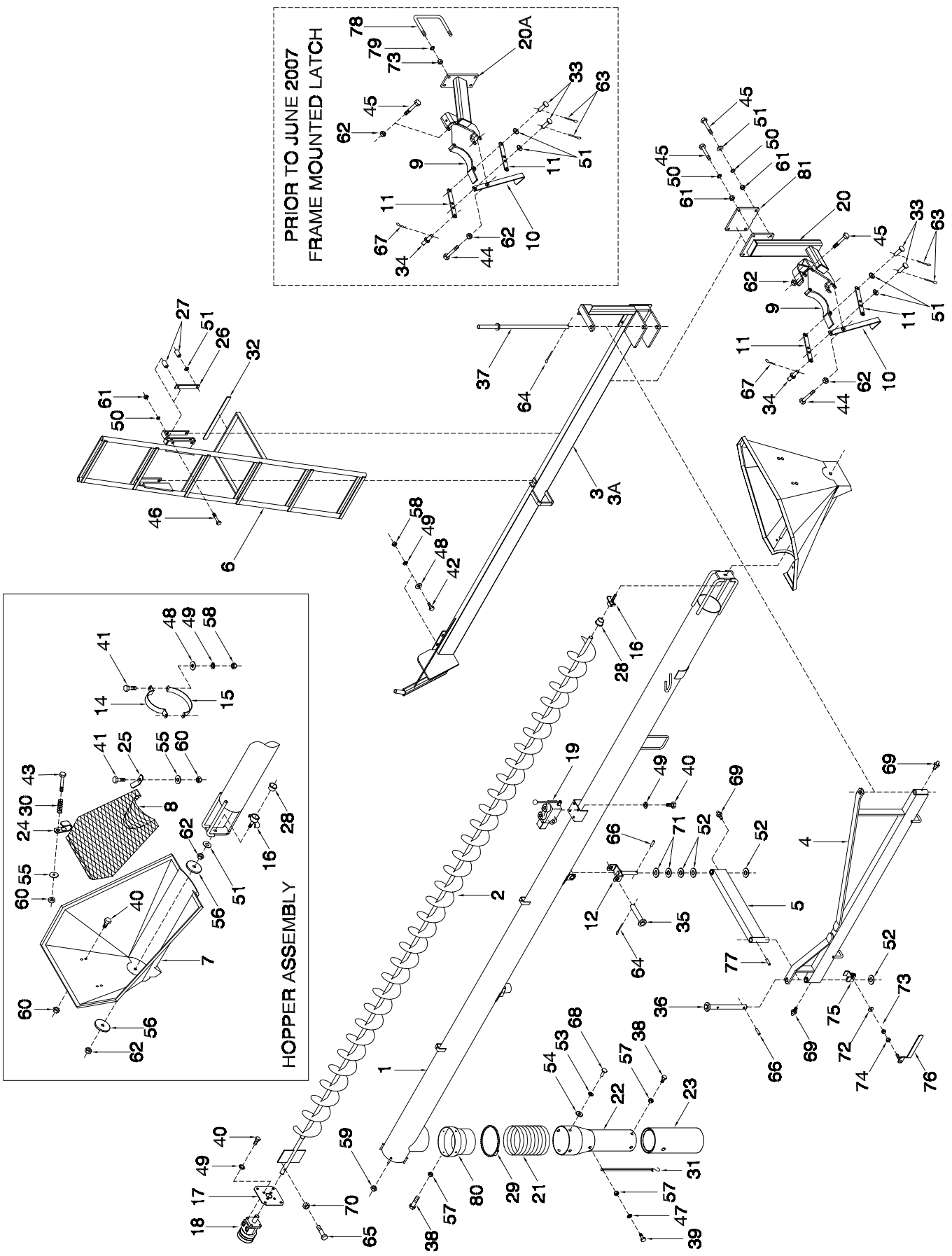
PRIOR TO JUNE 2007
FRAME MOUNTED LATCH
HOPPER ASSEMBLY

Auger - 7240 - 8 Front Latch Auger

Item	Part No.	Description	Qty
1	N34779	Auger Housing - 8 x 240 Lg	1
2	N27689	Flyteing - 8 x 237 1/2 Lg	1
3	N37570	Auger Mount Bracket - Prior to June 2007	1
	N42525	Auger Mount Bracket - June 2007	1
4	N21735	Arm - Auger - 72	1
5	N28328	Arm - Auger - 26	1
6	N27760	Ladder - Auger Access 7240	1
7	N19784	Auger Hopper - 44	1
8	N31020	Screen	1
9	N34788	Cradle - Auger - 8	1
10	N33553	Handle with Grip	1
	N32769	Grip for Handle N33553	
	N19737	Handle for N33553	
11	N19736	Link	2
12	N29395	Saddle - Auger Pivot	1
13	N34045	Auger Support	1
14	N25668	Strap - Upper Auger Hopper	1
15	N21294	Strap - Lower Auger Hopper - 4 3/4	1
16	N22809	Pin - Auger Bearing Support	1
17	N19480	Plate - Mount	1
18	N15982	Orbit Motor	1
	N16731	Seal Kit for N15982	
	N25319	Shaft for N15982	
19	N15024	Control Valve	1
	N31605	Seal Kit for N15204	
	N24595	Handle for N15204	
20	N42530	Auger Latch Support - June 2007 to present	1
20A	N34041	Auger Latch Support - Prior to June 2007	1
21	N22802	Flex Hose - 7 Dia x 12 Lg	1
22	N22799	Auger Spout	1
23	N24421	Auger Spout - Extension	1
24	N27705	Latch - Auger Screen - Lower	2
25	N27706	Latch - Auger Screen - Upper	2
26	N27761	Wear Plate - Ladder	2
27	N27759	Bushing - 3/4 OD x 1 7/8 Lg	4
28	C22785	Bushing - 1 5/8 OD x 3/4 Lg (Blue)	1
29	N15462	Hose Clamp - 8 Dia	1
30	N15045	Spring - 0.59 OD x 1 1/4 Lg	2
31	N19777	Tie Down Strap - 15 - Rubber	1
32	N19449	Seal Strip - 3/8 x 1 x 15 Lg (Bulk/ft)	1
33	BW-8	Pin - 1/2 x 1 1/32 UL	2
34	N19745	Lock Pin - 1/2 x 1 1/32 UL	1
35	N17217	Pin - 1 x 4 3/4 UL	1
36	N31765	Pin - Auger Pivot - 1 x 12 23/32 UL	1
37	N37569	Pin - Auger Pivot - 1 x 22 7/8 UL	1
38	W-469	Hex Bolt - 1/4 x 3/4 Lg	7
39	W-470	Hex Bolt - 1/4 x 1 1/4 Lg	1
40	W-867	Hex Bolt - 3/8 x 3/4 Lg	10
41	W-475	Hex Bolt - 3/8 x 1 Lg	4
42	W-187	Hex Bolt - 3/8 x 1 1/4 Lg	10
43	W-478	Hex Bolt - 3/8 x 2 Lg	9
44	W-492	Hex Bolt - 1/2 x 3 Lg	1
45	W-493	Hex Bolt - 1/2 x 3 1/2 Lg - Prior to June 2007	1
45	W-493	Hex Bolt - 1/2 x 3 1/2 Lg - June 2007	5
46	W-1575	Hex Bolt - 1/2 x 5 Lg	4
47	S-1198	Flatwasher - 1/4	1
48	W-538	Flatwasher - 3/8	12
49	W-523	Lockwasher - 3/8	20
50	W-525	Lockwasher - 1/2	4
51	W-539	Flatwasher - 17/32 ID x 1 3/8 OD x 12 Ga	7
52	D10803	Flatwasher - 1	4
53	D-5487	Outside Washer - 1/2 OD x 3/16 ID	4
54	D10788	Inside Washer - 7/8 OD x 3/16 ID	4
55	W14504	Flatwasher - 1 1/2 OD	4
56	N17232	Flatwasher - 4 1/8 OD	2
57	N22778	Locknut - 1/4 w/Nylon Insert	8
58	W-514	Hex Nut - 3/8	12
59	D-5279	Locknut - 3/8 Serrated	4
60	M-3388	Locknut - 3/8 Unitorque	6
61	W-516	Hex Nut - 1/2	8
62	F-3405	Locknut - 1/2 Unitorque	4
63	W-907	Cotter Pin - 5/32 x 3/4 Lg	2
64	W-535	Cotter Pin - 1/4 x 1 1/2 Lg	2
65	S-1303	Hex Bolt - 5/16 x 2 Lg	1
66	J12281	Spiral Pin - 5/16 x 2 Lg	2
67	W-131	Hair Pin - #9 - 0.148 x 3 5/16 Lg	1
68	D-4945	Pop Rivet - 3/16 x 3/8 GRIP	4
69	S-752	Grease Zerk - 1/4 Straight	3
70	D-5278	Locknut - 5/16 Serrated	1
71	N19192	Bushing - 1 ID x 1 1/2 OD x 1/2 Lg	2
72	W-793	Flatwasher - 5/8	1
73	W-517	Hex Nut - 5/8 - Prior to June 2007	5
	W-517	Hex Nut - 5/8 - June 2007	1
74	C-1472	Jam Nut - 5/8	1
75	N31775	Lock - Auger Arm	1
76	N31763	Handle	1
77	N15983	Spiral Pin - 5/16 x 1 1/2 Lg	1
78	C29610	U-Bolt - 5/8 x 8 x 5 1/2 - Prior to June 2007	2
79	W-526	Lockwasher - 5/8 - Prior to June 2007	4
80	N21706	Reducer - Auger Spout	1
81	N44143	Mount Plate - June 2007	1
	N34477	Reflector - AMBER (Not Shown)	2
	N19031	Decal - Information (Not Shown)	1
	N19032	Decal - Information (Not Shown)	1
	N19033	Decal - Danger (Not Shown)	1
	N19034	Decal - Danger (Not Shown)	1
	N31774	Decal - Information - Auger Arm Lock (Not Shown)	1
	N19020	Decal - Caution (Not Shown)	1
	N19778	Extendible Spout Assembly Includes Items #21, 22, 23, 31, 38, 39, 47, 53, 54, 57 & 68)	

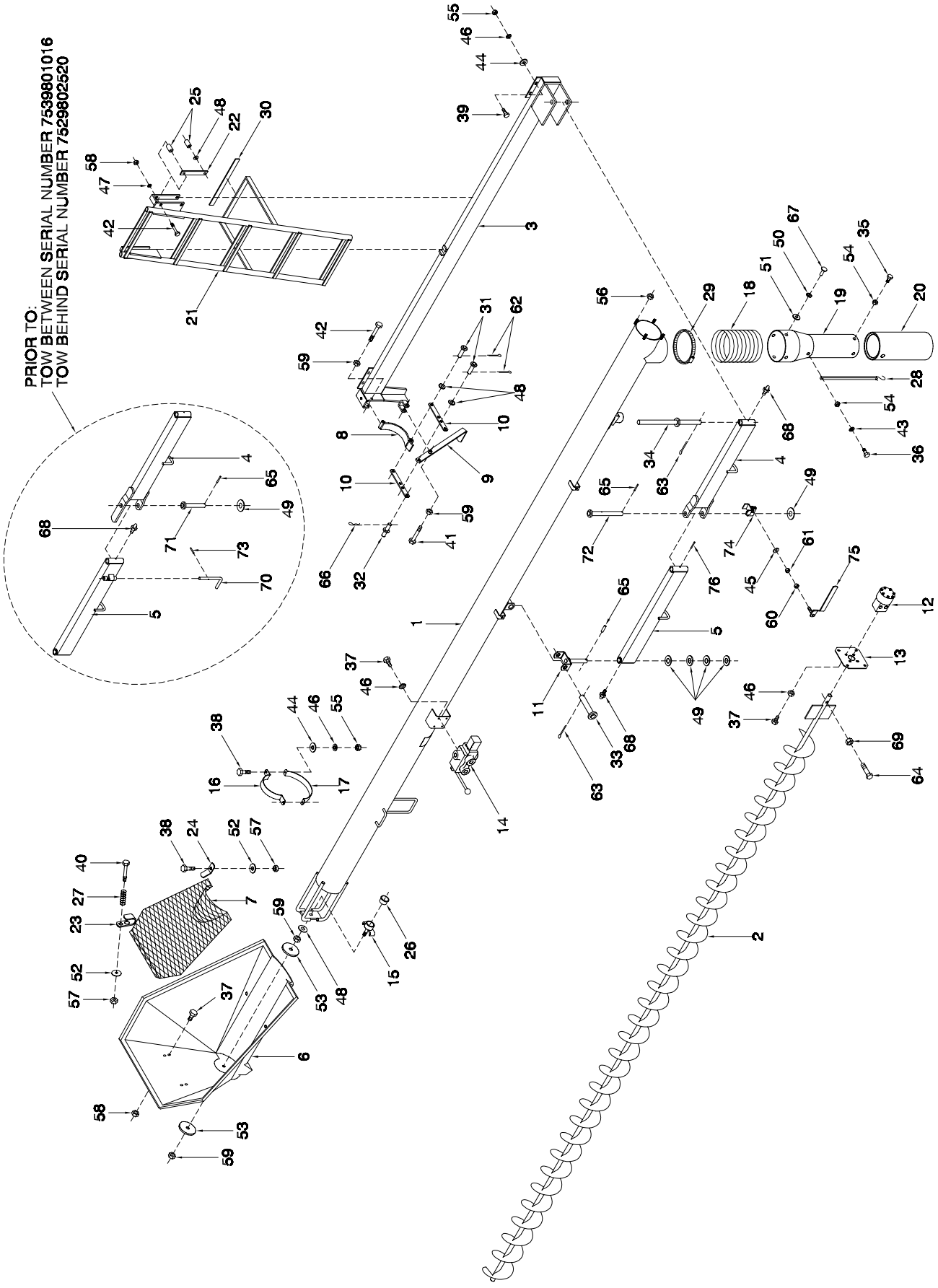
PRIOR TO:
TOW BETWEEN SERIAL NUMBER 7539801016
TOW BEHIND SERIAL NUMBER 7529802520

Auger - 7252 - 7 Auger

Item	Part No.	Description	Qty
1	N27659	Auger Housing - 7 x 222 Lg	1
2	N25544	Flyteing - 7 x 219 1/2 Lg	1
	N21079	Brush Flyteing - (Not Shown)(Opt) Order thru Whole goods	1
3	N27645	Auger Mount Bracket	1
4	N31545	Inner Auger Arm - 31 3/4	1
	N31772	Inner Auger Arm - 31 3/4 (Current)	1
5	N31546	Outer Auger Arm - 31 3/4	1
	N31773	Outer Auger Arm - 31 3/4 (Current)	1
6	N19784	Auger Hopper - 44	1
7	N31020	Screen (1998 to present)	1
	N19788	Screen (Prior to1997)	1
	N31019	Fine Screen (Not Shown)(1998 to present) (Optional)	1
	N27708	Fine Screen (Not Shown)(Prior to 1997) (Optional)	1
8	N28915	Cradle - 7	1
9	N33553	Handle w/Grip - Lock Arm Auger	1
	N32769	Grip for N33553	1
	N19737	Handle for N33553	1
10	N19736	Link	2
11	N19195	Saddle - Auger Pivot	1
12	N15982	Orbit Motor	1
	N16731	Seal kit for N15982	1
	N25319	Shaft for N15982	1
13	N19480	Mount Plate	1
14	N15024	Control Valve	1
	N31605	Seal kit for N15204	1
	N24595	Handle for N15204	1
15	N22809	Bearing Support	1
16	N21293	Strap - Upper - 3 1/2	1
17	N21294	Strap - Lower - 4 3/4	1
18	N22802	Hose - Flex - 7 Dia x 12 Lg	1
19	N22799	Auger Spout	1
20	N24421	Auger Spout - Extension	1
21	N27755	Ladder - Auger Access	1
22	N27761	Wear Plate - Ladder	2
23	N27705	Latch - Auger Screen - Lower	2
24	N27706	Latch - Auger Screen - Upper	2
25	N27759	Bushing - 3/4 OD x 1 7/8 Lg	4
26	C22785	Bushing (Blue) - 1 5/8 OD x 3/4 Lg	1
27	N15045	Spring - 0.59 OD x 1 1/4 Lg	2
28	N19777	Tie Down Strap - 15 - Rubber	1
29	N15462	Hose Clamp - 8 Dia	1
30	N19449	Seal Strip - 3/8 x 1 x 15(Bulk/ft)	1
31	BW-8	Pin - 1/2 x 1 1/32 UL	2
32	N19745	Lock Pin - 1/2 x 1 1/32 UL	1
33	N17217	Pin - 1 x 4 3/4 UL	1
34	N27700	Pin - Auger Pivot - 1 Dia	1
35	W-469	Hex Bolt - 1/4 x 3/4 Lg	3
36	W-470	Hex Bolt - 1/4 x 1 1/4 Lg	1
37	W-867	Hex Bolt - 3/8 x 3/4 Lg	10
38	W-475	Hex Bolt - 3/8 x 1 Lg	4
39	W-187	Hex Bolt - 3/8 x 1 1/4 Lg	8
40	W-478	Hex Bolt - 3/8 x 2 Lg	2
41	W-492	Hex Bolt - 1/2 x 3 Lg	1
42	W-493	Hex Bolt - 1/2 x 3 1/2 Lg	5
43	S-1198	Flatwasher - 1/4	1
44	W-538	Flatwasher - 3/8	10
45	W-793	Flatwasher - 5/8	1
46	W-523	Lockwasher - 3/8	18
47	W-525	Lockwasher - 1/2	4
48	W-539	Washer - 17/32 ID x 1 3/8 OD x 12 Ga	4
49	D10803	Flatwasher - 1	5
50	D-5487	Outside Washer - 1/2 OD x 3/16 ID	4
51	D10788	Inside Washer - 7/8 OD x 3/16 ID	4
52	W14504	Flatwasher - 1 1/2 OD	4
53	N17232	Flatwasher - 4 1/8 OD	2
54	N22778	Locknut - 1/4	4
55	W-514	Hex Nut 3/8	10
56	D-5279	Serrated Locknut - 3/8	4
57	M-3388	Locknut - 3/8 Unitorque	4
58	W-516	Hex Nut - 1/2	4
59	F-3405	Locknut - 1/2 Unitorque	3
60	C-1472	Jam Nut - 5/8	1
61	W-517	Hex Nut - 5/8	1
62	W-907	Cotter Pin - 5/32 x 3/4 Lg	2
63	W-535	Cotter Pin - 1/4 x 1 1/2 Lg	2
64	S-1303	Hex Bolt - 5/16 x 2 Lg	1
65	J12281	Spiral Pin - 5/16 x 2 Lg	2
66	W-131	Hairpin - #9 - 0.148 x 3 5/16 Lg	1
67	D-4945	Pop Rivet - 3/16 x 3/8 GRIP	4
68	S-752	Grease Zerk - 1/4 Straight	3
69	D-5278	Locknut - 5/16 Serrated	1
70	N31518	Handle (Prior to June/99)	1
71	N31628	Pin - 1 x 5 29/32 (Prior to June/99)	1
72	N31767	Pin - 1 x 7 21/32 (Current)	1
73	S-3001	Spiral Pin - 3/16 x 1 (Prior to June/99)	1
74	N31760	Lock - Auger Arm (Current)	1
75	N31763	Handle (Current)	1
76	N15983	Spiral Pin - 5/16 x 1 1/2 Lg (Current)	1
77	N31774	Decal - Information (Not Shown)	1
	N34477	Reflector - AMBER (Not Shown)	2
	N19031	Decal - Information (Not Shown)	1
	N19032	Decal - Information (Not Shown)	1
	N19033	Decal - Danger (Not Shown)	1
	N19034	Decal - Danger (Not Shown)	1
	N19481	Spout Assembly (Includes Items 18, 19, 50, 51 & 67)	
	N19778	Extendible Spout Assembly (Optional) (Includes Items 18, 19, 20, 28, 35, 36, 43, 50, 51, 54 & 67)	
	N23188	Kit - Spout Extention (Optional) (Includes Items 20, 28, 35, 36, 43 & 54)	
	N31769	Kit - Auger Arm Lock 7252 (Includes 45, 49, 60, 61, 65, 72, 74, 75, 76, 77)	

Notes

Section 7:
Fan

Section Contents

Crary Belt Drive 7-2
Crary Hydraulic Drive 7-3

Fan
Crary Belt Drive

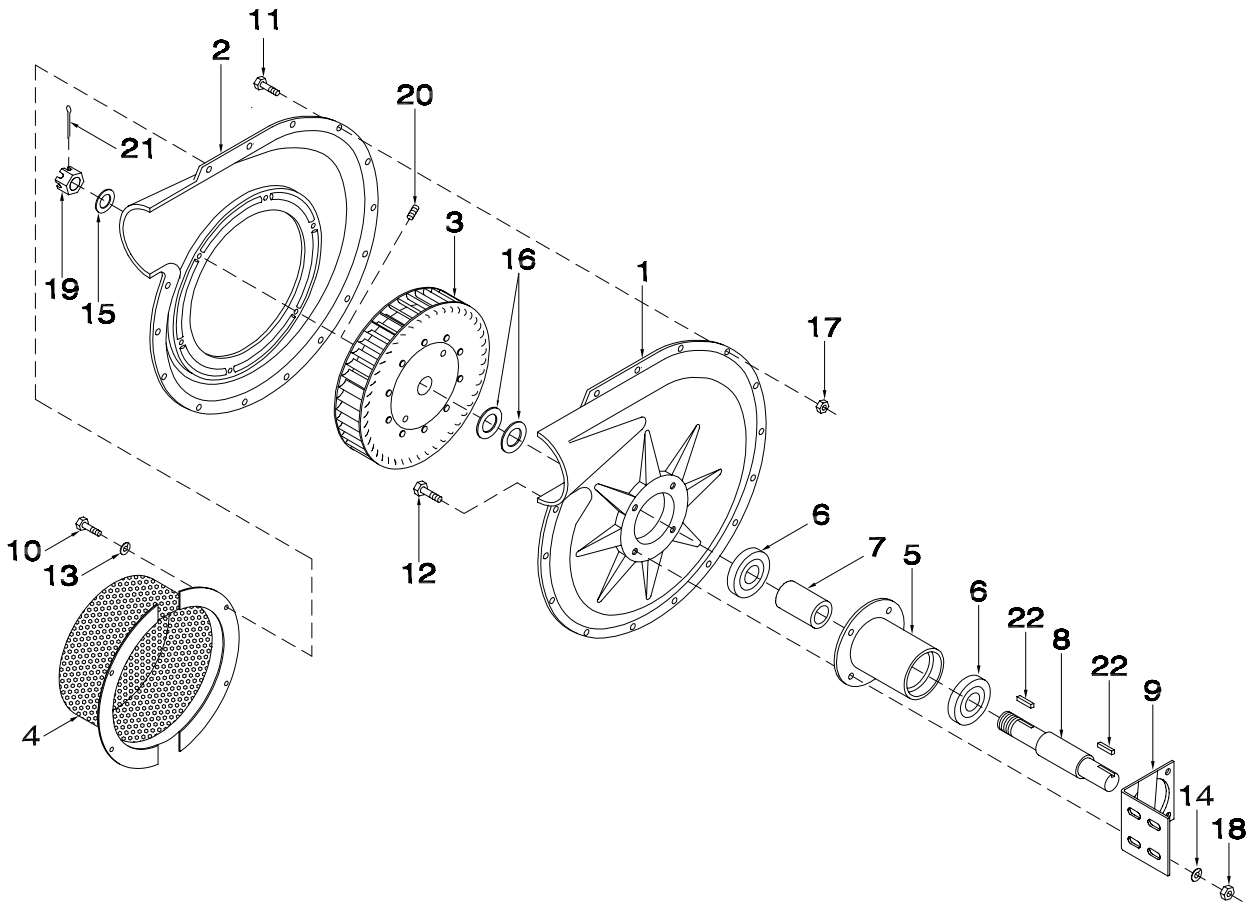

Item	Part No.	Description	Qty
1	N19499	Drive Side Casting	1
2	N16709	Inlet Side Casting	1
3	N19498	Rotor	1
4	N28190	Screen	1
5	N19500	Bearing Housing	1
6	N19502	Bearing	2
7	N19565	Spacer	1
8	N19501	Shaft	1
9	N19463	Mount Bracket	1
10	W-469	Hex Bolt - 1/4 x 3/4 Lg	6
11	W-1552	Hex Bolt - 1/4 x 1 Lg	15
12	W-486	Hex Bolt - 1/2 x 1 1/2 Lg	4
13	S-4747	Flatwasher - 1/4	6
14	W-525	Lockwasher - 1/2	4
15	W-476	Flatwasher - 3/4	1
16	W-544	Flatwasher - 7/8	2
17	D-5277	Lock Nut - 1/4 Serrated	15
18	W-516	Hex Nut - 1/2	4
19	N19505	Castle Nut - 3/4	1
20	N19564	Setscrew - 5/16 x 5/8 Lg	1
21	D-5237	Cotter Pin - 5/32 x 1 1/2 Lg	1
22	N19084	Key - 3/16 x 3/16 x 1 1/4 Lg	2
	N19369	Fan (Includes All Above Items Except #4)	

Fan
Crary Hydraulic Drive

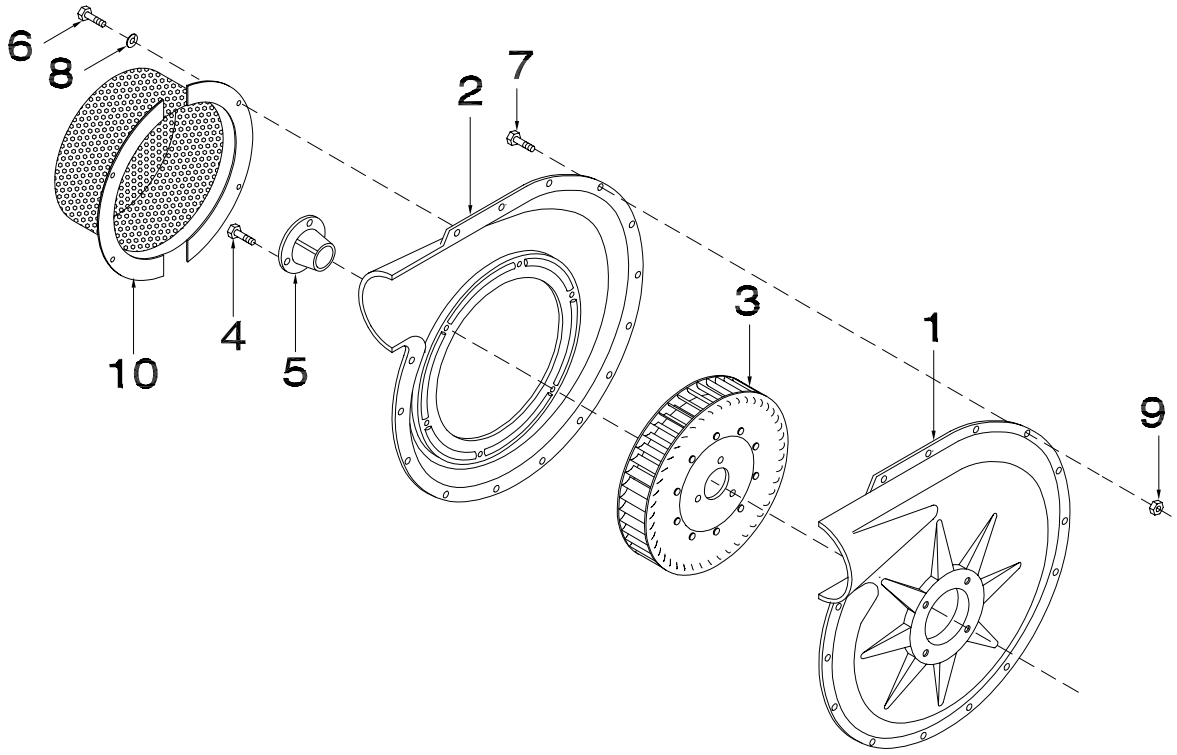

Item	Part No.	Description	Qty
1	N16708	Bearing Plate Casting	1
2	N16709	Inlet Casting	1
3	N16710	Rotor	1
4	N16716	Machine Screw - #10-24 x 1	3
5	N16712	Tapered Bushing (Includes Hardware)	1
6	W-469	Hex Bolt - 1/4 x 3/4 Lg	6
7	W-1552	Hex Bolt - 1/4 x 1 Lg	15
8	S-4747	Flatwasher - 1/4	6
9	D-5277	Lock Nut - 1/4 Serrated	15
10	N28190	Screen - Fan Inlet	1
	N29373	Key - 6 mm SQ x 15 (Not Shown)	1
	N16263	Fan (Includes All Above Items Except for #10)	

Notes

Section 8:
Monitor

Section Contents

Version 1 Monitor & Pin Blockage Module 8-2
Version 2 Monitor & Pin Blockage Module 8-4
Version 3 Monitor & Pin Blockage Module 8-6
Replacement Connectors 8-8
Optical Blockage System 8-9
FTU - Field Test Unit 8-10

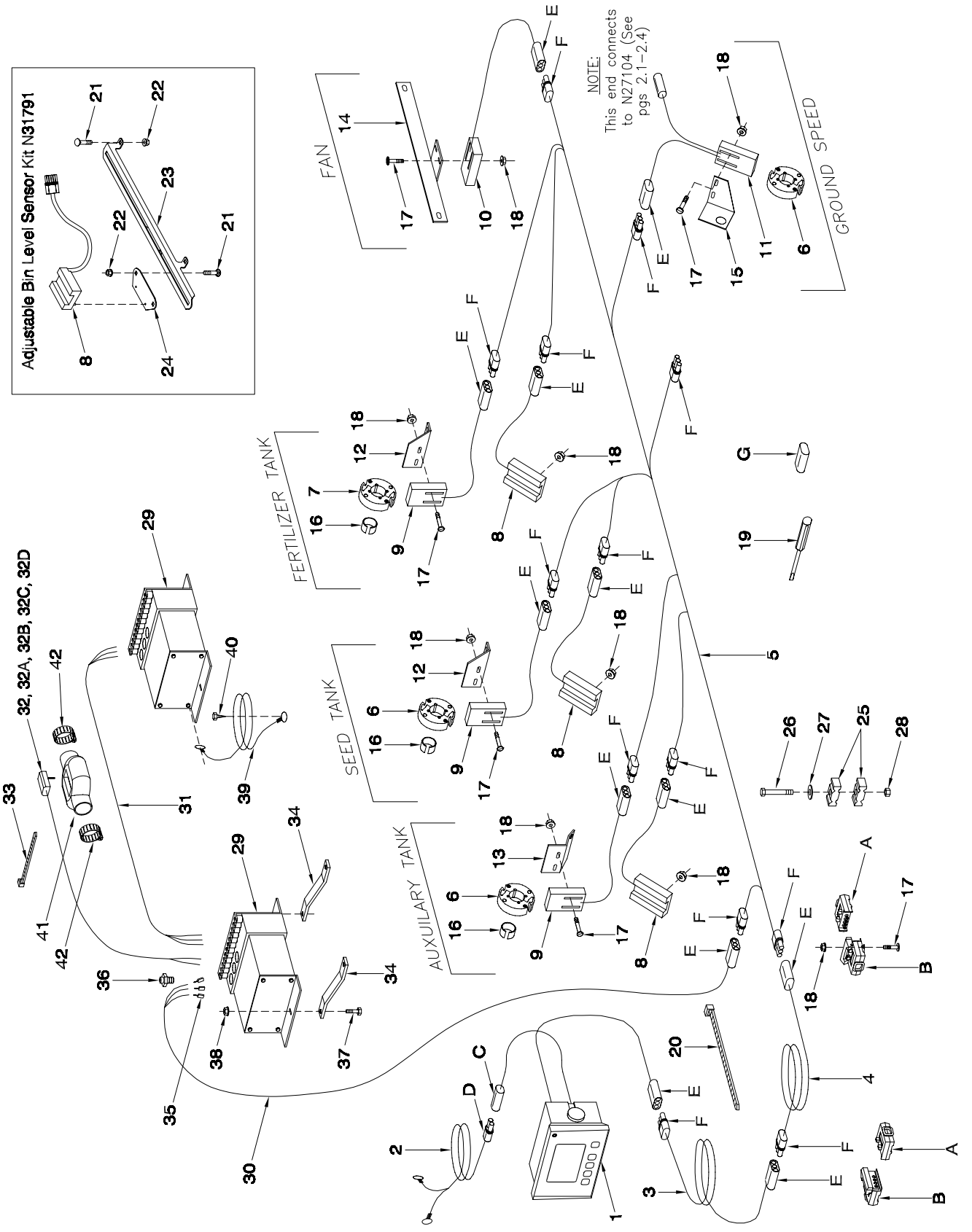
Adjustable Bin Level Sensor Kit N31791
FAN
FERTILIZER TANK
SEED TANK
AUXUILARY TANK
GROUND SPEED
NOTE:
This end connects to N27104 (See pgs 2.1-2.4)
32, 32A, 32B, 32C, 32D

Monitor - Version 1 Monitor and Pin Blockage Module

Item	Part No.	Description	Qty
		Monitor Assembly	
1	N27010	Monitor - Version 1 - NEW	1
	N27010R	Monitor - Version 1 - REBUILT	
2	N27609	Power Cable - Monitor	1
3	N32470	Wire - Monitor Extension - 21 ft (Weather Pak)	1
	N27608	Wire - Monitor Extension - 21 ft (Brylite)	1
4	N32471	Wire - Monitor Extension - 37 1/2 ft (Weather Pak) Tow Behind ONLY	1
	N28199	Wire - Monitor Extension - 37 1/2 ft (Brylite) Tow Behind ONLY	1
5	N32472	Harness - Monitor (Weather Pak) 7130 / 7180 Tow Behind	1
	N27006	Harness - Monitor (Brylite) 7130 / 7180 Tow Behind	1
	N32474	Harness - Monitor (Weather Pak) 7240 / 7300 Tow Behind	1
	N27008	Harness - Monitor (Brylite) 7240 / 7300 Tow Behind	1
	N32473	Harness - Monitor (Weather Pak) 7180 Tow Between	1
	N27007	Harness - Monitor (Brylite) 7180 Tow Between	1
	N32475	Harness - Monitor (Weather Pak) 7240 Tow Between	1
	N27009	Harness - Monitor (Brylite) 7240 Tow Between	1
	N32476	Harness - Monitor (Weather Pak) 7252 Tow Behind	1
	N31550	Harness - Monitor (Brylite) 7252 Tow Behind	1
	N32477	Harness - Monitor (Weather Pak) 7252 Tow Between	1
	N31551	Harness - Monitor (Brylite) 7252 Tow Between	1
6	N16471	Reed Switch Actuator - 4 Magnet	3
7	N16473	Reed Switch Actuator - 2 Magnet	1
8	N27616	Sensor - Bin Level c/w Gasket	3
9	N27617	Reed Switch	3
10	N27618	Magnetic Sensor - Fan	1
11	N27619	Reed Switch - Ground	1
12	N19450	Sensor Mount - Metershaft - Main	2
13	N21671	Sensor Mount - Metershaft - Granular	1
14	N16565	Sensor Mount - Fan	1
15	N27621	Sensor Mount - Main Switch - Ground	1
16	N19599	Bushing - Spacer	3
17	N16563	Machine Screw - #8 - 32 UNC x 1 1/4 Lg	14
18	N16564	Serrated Locknut - #8 - 32 UNC	20
19	N27625	Assembly Tool - Packard Connector	1
20	D-4838	Nylon Tie Strap - 14 1/2 Lg (Black)	1
21	D-5259	Carriage Head Bolt - 5/16 x 3/4	6
22	D-5278	Serrated Nut - 5/16	6
23	N31792	Adjustment Plate	1
24	N31790	Base Plate	1
25	C-4698	Nylon Clamp	2
26	W-479	Hex Head Bolt - 3/8 x 2 1/4	1
27	W-538	Flat Washer - 3/8	1
28	M-3388	Lock Nut - 3/8	1
		Blockage Module Assembly - Pin Sensor	
29	N27624	Module - Blockage	As req
30	N27623	Wire - Blockage Module (Required for 1st Module ONLY)	1
31	N16474	Wire - Connector - Blockage Module (Req'd for subsequent Modules)	As req
32	N28487	Pin Sensor - 5 ft Lg	As req
32A	N28488	Pin Sensor - 10 ft Lg	As req
32B	N28489	Pin Sensor - 15 ft Lg	As req
32C	N28490	Pin Sensor - 20 ft Lg	As req
32D	N28491	Pin Sensor - 30 ft Lg	As req
33	N34263	Nylon Tie Strap - 11 1/2 Lg (Qty per Pin Sensor)	1
34	N21520	Bracket - Mount (Qty per Blockage Module)	2
35	N21654	Female Connector - 18 Ga Fast-On (Qty per Blockage Module)	6
36	N21653	Module Wire Retainer (Qty per Blockage Module)	2
37	W-469	Hex Bolt - 1/4 x 3/4 Lg (Qty per Blockage Module)	2
38	D-5277	Serrated Locknut - 1/4 (Qty per Blockage Module)	2
39	N31049	Wire - Ground - Blockage Module (Qty per Blockage Module)	1
40	N16698	Screw - 1/4 x 3/4 Self Tapping (Qty per Blockage Module)	1
41	N29735	Sensor Bubble w/clamps	As req
42	N11470	Clamp	As req
		Blockage Module Kits and Replacement Parts on Page 8-8	

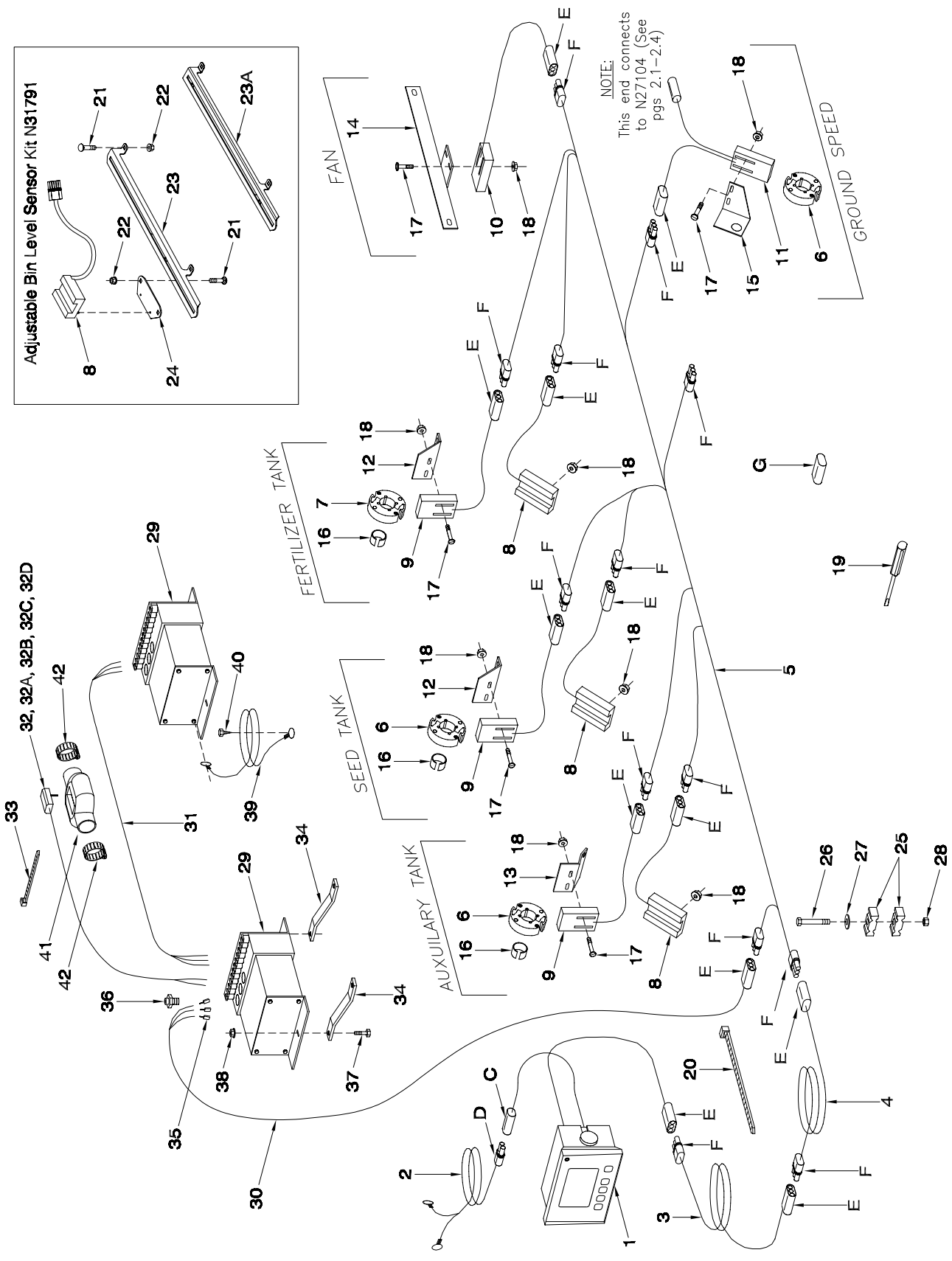
Adjustable Bin Level Sensor Kit N31791
FAN
FERTILIZER TANK
SEED TANK
AUXUILARY TANK
GROUND SPEED
NOTE:
This end connects to N27104 (See pgs 2.1-2.4)
32, 32A, 32B, 32C, 32D

Monitor - Version 2 Monitor and Blockage Module

Item	Part No.	Description	Qty
		Monitor Assembly	
1	N37010	Monitor - Version 2 - NEW	1
	N37010R	Monitor - Version 2 - REBUILT	
2	N27609	Power Cable - Monitor	1
3	N32470	Wire - Monitor Extension - 21 ft (Weather Pak)	1
4	N32471	Wire - Monitor Extension - 37 1/2 ft (Weather Pak) Tow Behind ONLY	1
5	N32472	Harness - Monitor (Weather Pak) 7130 / 7180 Tow Behind	1
	N32474	Harness - Monitor (Weather Pak) 7240 / 7300 Tow Behind	1
	N32473	Harness - Monitor (Weather Pak) 7180 Tow Between	1
	N32475	Harness - Monitor (Weather Pak) 7240 Tow Between	1
	N32476	Harness - Monitor (Weather Pak) 7252 Tow Behind	1
	N32477	Harness - Monitor (Weather Pak) 7252 Tow Between	1
6	N16471	Reed Switch Actuator - 4 Magnet	3
7	N16473	Reed Switch Actuator - 2 Magnet	1
8	N27616	Sensor - Bin Level c/w Gasket	3
9	N27617	Reed Switch	3
10	N27618	Magnetic Sensor - Fan	1
11	N27619	Reed Switch - Ground	1
12	N19450	Sensor Mount - Metershaft - Main	2
13	N21671	Sensor Mount - Metershaft - Granular	1
14	N16565	Sensor Mount - Fan	1
15	N27621	Sensor Mount - Main Switch - Ground	1
16	N19599	Bushing - Spacer	3
17	N16563	Machine Screw - #8 - 32 UNC x 1 1/4 Lg	14
18	N16564	Serrated Locknut - #8 - 32 UNC	20
19	N27625	Assembly Tool - Packard Connector	1
20	D-4838	Nylon Tie Strap - 14 1/2 Lg (Black)	1
21	D-5259	Carriage Head Bolt - 5/16 x 3/4	6
22	D-5278	Serrated Nut - 5/16	6
23	N31792	Adjustment Plate - Prior to June 2007	1
23A	N42149	Adjustment Plate - June 2007	1
24	N31790	Base Plate	1
25	C-4698	Nylon Clamp	2
26	W-479	Hex Head Bolt - 3/8 x 2 1/4	1
27	W-538	Flat Washer - 3/8	1
28	M-3388	Lock Nut - 3/8	1
		Blockage Module Assembly - Pin Sensor	
29	N27624	Module - Blockage	As req
30	N27623	Wire - Blockage Module (Required for 1st Module ONLY)	1
31	N16474	Wire - Connector - Blockage Module (Req'd for subsequent Modules)	As req
32	N28487	Pin Sensor - 5 ft Lg	As req
32A	N28488	Pin Sensor - 10 ft Lg	As req
32B	N28489	Pin Sensor - 15 ft Lg	As req
32C	N28490	Pin Sensor - 20 ft Lg	As req
32D	N28491	Pin Sensor - 30 ft Lg	As req
33	N34263	Nylon Tie Strap - 11 1/2 Lg (Qty per Pin Sensor)	1
34	N21520	Bracket - Mount (Qty per Blockage Module)	2
35	N21654	Female Connector - 18 Ga Fast-On (Qty per Blockage Module)	6
36	N21653	Module Wire Retainer (Qty per Blockage Module)	2
37	W-469	Hex Bolt - 1/4 x 3/4 Lg (Qty per Blockage Module)	2
38	D-5277	Serrated Locknut - 1/4 (Qty per Blockage Module)	2
39	N31049	Wire - Ground - Blockage Module (Qty per Blockage Module)	1
40	N16698	Screw - 1/4 x 3/4 Self Tapping (Qty per Blockage Module)	1
41	N29735	Sensor Bubble w/clamps	As req
42	N11470	Clamp	As req
		Optical Sensor - See Page 8-9	
		Blockage Module Kits and Replacement Parts on Page 8-8	

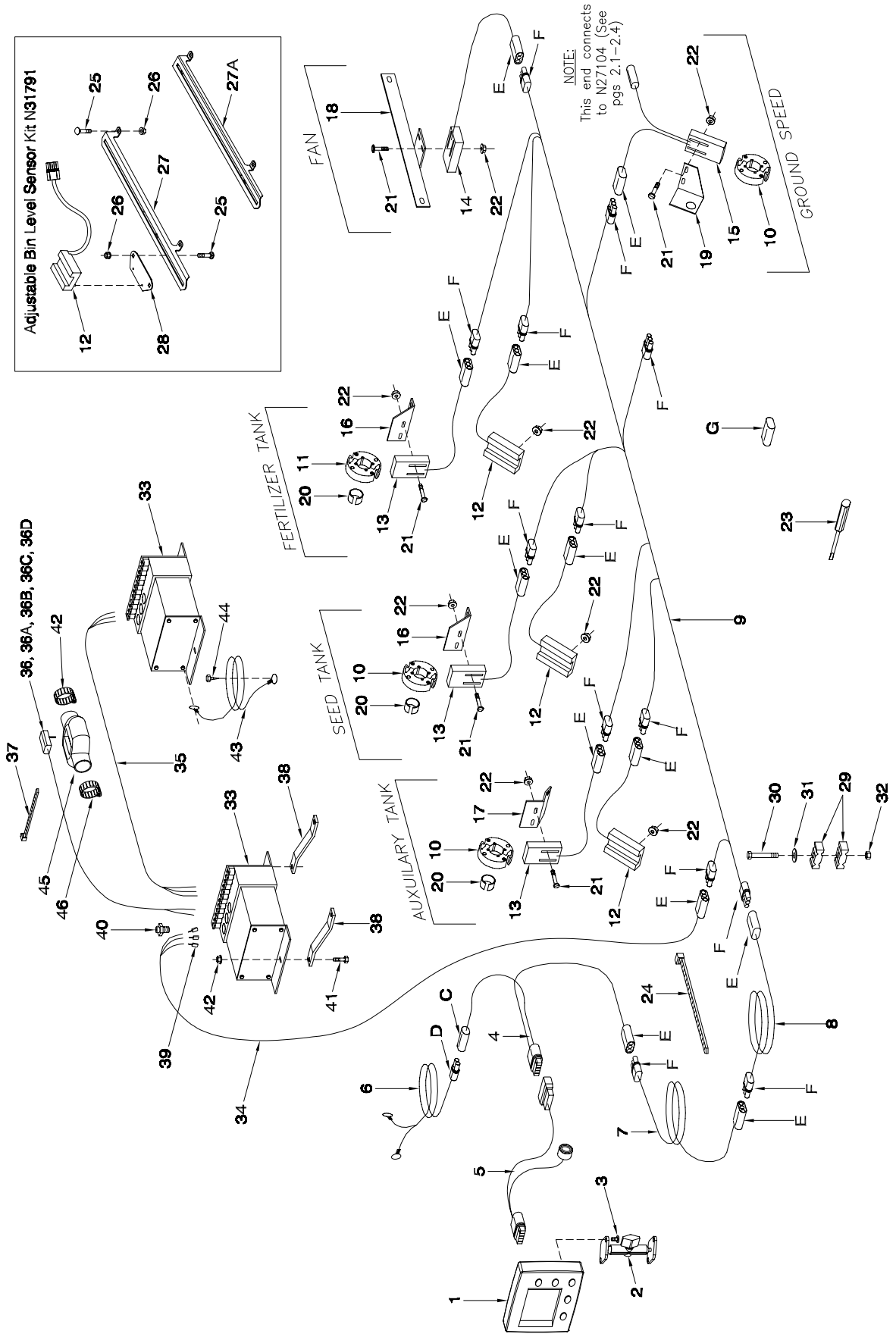
Adjustable Bin Level Sensor Kit N31791
FAN
FERTILIZER TANK
SEED TANK
AUXUILARY TANK
GROUND SPEED
NOTE:
This end connects to N27104 (See pgs 2.1-2.4)
36, 36A, 36B, 36C, 36D

Monitor - Version 3 Monitor and Blockage Module

Item	Part No.	Description	Qty
		Monitor Assembly	
1	N44049	Monitor - Version 3 - NEW	1
	N44049R	Monitor - Version 3 - REBUILT	
2	N44254	Mount - VMD Monitor	1
3	N44265	Machine Screw - #10-32 x 1/2	2
4	N44253	Power Cable - VMD Monitor	1
5	N44264	Alarm and Cable Assembly - Optional	1
	N44256	Alarm	1
	N44255	Adaptor Cable	1
6	N27609	Power Cable - Monitor	1
7	N32470	Wire - Monitor Extension - 21 ft (Weather Pak)	1
8	N32471	Wire - Monitor Extension - 37 1/2 ft (Weather Pak) Tow Behind ONLY	1
9	N32472	Harness - Monitor (Weather Pak) 7130 / 7180 Tow Behind	1
	N32474	Harness - Monitor (Weather Pak) 7240 / 7300 Tow Behind	1
	N32473	Harness - Monitor (Weather Pak) 7180 Tow Between	1
	N32475	Harness - Monitor (Weather Pak) 7240 Tow Between	1
	N32476	Harness - Monitor (Weather Pak) 7252 Tow Behind	1
	N32477	Harness - Monitor (Weather Pak) 7252 Tow Between	1
10	N16471	Reed Switch Actuator - 4 Magnet	3
11	N16473	Reed Switch Actuator - 2 Magnet	1
12	N27616	Sensor - Bin Level c/w Gasket	3
13	N27617	Reed Switch	3
14	N27618	Magnetic Sensor - Fan	1
15	N27619	Reed Switch - Ground	1
16	N19450	Sensor Mount - Metershaft - Main	2
17	N21671	Sensor Mount - Metershaft - Granular	1
18	N16565	Sensor Mount - Fan	1
19	N27621	Sensor Mount - Main Switch - Ground	1
20	N19599	Bushing - Spacer	3
21	N16563	Machine Screw - #8 - 32 UNC x 1 1/4 Lg	14
22	N16564	Serrated Locknut - #8 - 32 UNC	20
23	N27625	Assembly Tool - Packard Connector	1
24	D-4838	Nylon Tie Strap - 14 1/2 Lg (Black)	1
25	D-5259	Carriage Head Bolt - 5/16 x 3/4	6
26	D-5278	Serrated Nut - 5/16	6
27	N31792	Adjustment Plate - Prior to June 2007	1
27A	N42149	Adjustment Plate - June 2007	1
28	N31790	Base Plate	1
29	C-4698	Nylon Clamp	2
30	W-479	Hex Head Bolt - 3/8 x 2 1/4	1
31	W-538	Flat Washer - 3/8	1
32	M-3388	Lock Nut - 3/8	1
		Blockage Module Assembly - Pin Sensor	
33	N27624	Module - Blockage	As req
34	N27623	Wire - Blockage Module (Required for 1st Module ONLY)	1
35	N16474	Wire - Connector - Blockage Module (Req'd for subsequent Modules)	As req
36	N28487	Pin Sensor - 5 ft Lg	As req
36A	N28488	Pin Sensor - 10 ft Lg	As req
36B	N28489	Pin Sensor - 15 ft Lg	As req
36C	N28490	Pin Sensor - 20 ft Lg	As req
36D	N28491	Pin Sensor - 30 ft Lg	As req
37	N34263	Nylon Tie Strap - 11 1/2 Lg (Qty per Pin Sensor)	1
38	N21520	Bracket - Mount (Qty per Blockage Module)	2
39	N21654	Female Connector - 18 Ga Fast-On (Qty per Blockage Module)	6
40	N21653	Module Wire Retainer (Qty per Blockage Module)	2
41	W-469	Hex Bolt - 1/4 x 3/4 Lg (Qty per Blockage Module)	2
42	D-5277	Serrated Locknut - 1/4 (Qty per Blockage Module)	2
43	N31049	Wire - Ground - Blockage Module (Qty per Blockage Module)	1
44	N16698	Screw - 1/4 x 3/4 Self Tapping (Qty per Blockage Module)	1
45	N29735	Sensor Bubble w/clamps	As req
46	N11470	Clamp	As req
		Optical Sensor - See Page 8-9	
		Blockage Module Kits and Replacement Parts on Page 8-8	

Monitor
Replacement Connectors

Item	Part No.	Description	Qty
		Replacement Connectors	
A	N21538	Brylite Connector - 4 Pin Male	
B	N21539	Brylite Connector - 4 Pin Female	
C	N29384	Weather Pak Connector - BLACK - 2 Pin Plug (Shroud)	
D	N29385	Weather Pak Connector - BLACK - 2 Pin Socket (Tower)	
E	N27613	Weather Pak Connector - BLACK - 3 Pin Plug (Shroud)	
F	N27614	Weather Pak Connector - BLACK - 3 Pin Socket (Tower)	
G	N27615	Seal Connector - BLACK - 3 Pin Plug	
H	N29151	Weather Pak Connector - BLACK - 4 Pin Plug (Shroud)	
I	N29152	Weather Pak Connector - BLACK - 4 Pin Socket (Tower)	
J	N29153	Seal Connector - BLACK - 4 Pin Plug	
K	N28901	Weather Pak Connector - BLUE - 3 Pin Plug (Shroud)	
L	N28902	Weather Pak Connector - BLUE - 3 Pin Socket (Tower)	
M	N29143	Seal Connector - BLUE - 3 Pin Plug	
N	N28903	Weather Pak Connector - RED - 3 Pin Plug (Shroud)	
O	N28904	Weather Pak Connector - RED - 3 Pin Socket (Tower)	
P	N29144	Seal Connector - RED - 3 Pin Plug	
Q	N28905	Weather Pak Connector - WHITE - 3 Pin Plug (Shroud)	
R	N28906	Weather Pak Connector - WHITE - 3 Pin Socket (Tower)	
S	N29145	Seal Connector - WHITE - 3 Pin Plug	
	N29147	Seal - Weather Pak - Cavity Plug (Not Shown)	
	N29148	Seal - Weather Pak - Wire Plug (Not Shown)	
	N29149	Terminal - Weather Pak - Male End (Not Shown)	
	N29150	Terminal - Weather Pak - Female End (Not Shown)	
		Replacement Parts (Not Shown)	
	N24391	Fuse Holder & Cap (Installed in Clutch Switch Box N27011)	
	N30575	Circuit Breaker FC-191-05-15-P (Installed in Item #1 - Versions 1.1 to 1.3)	
	N24302	Magnet Only - 1/4 Round x 3/4 Lg (Installed in Items #6 & 7) - pairs only	
	N28671	Mount Bracket - Monitor - #VM253501	
	N29833	Knob for Monitor Mount Bracket - #103302	
		Blockage Module Kits - Pin Sensor	
	N27606	Blockage Module Kit (Includes Items #25, 30, 31, 32, 33, 34, 35 & 36)	
	N30659	5 ft Pin Sensor Kit (Includes Items #28 & 29)	
	N30660	10 ft Pin Sensor Kit (Includes Items #28A & 29)	
	N30661	15 ft Pin Sensor Kit (Includes Items #28B & 29)	
	N30662	20 ft Pin Sensor Kit (Includes Items #28C & 29)	
	N30663	30 ft Pin Sensor Kit (Includes Items #28D & 29)	
	N35530	Kit 5 ft Pin Sensor w/ Bubble (Includes Items #28, 29 & 37)	
	N35531	Kit 10 ft Pin Sensor w/ Bubble (Includes Items #28A, 29 & 37)	
	N35532	Kit 15 ft Pin Sensor w/ Bubble (Includes Items #28B, 29 & 37)	
	N35533	Kit 20 ft Pin Sensor w/ Bubble (Includes Items #28C, 29 & 37)	
	N35534	Kit 30 ft Pin Sensor w/ Bubble (Includes Items #28D, 29 & 37)	
		ORDER KITS THROUGH WHOLEGOODS ONLY	

Monitor
Optical Blockage System

Can only be used with Version 2 and 3 Monitors.

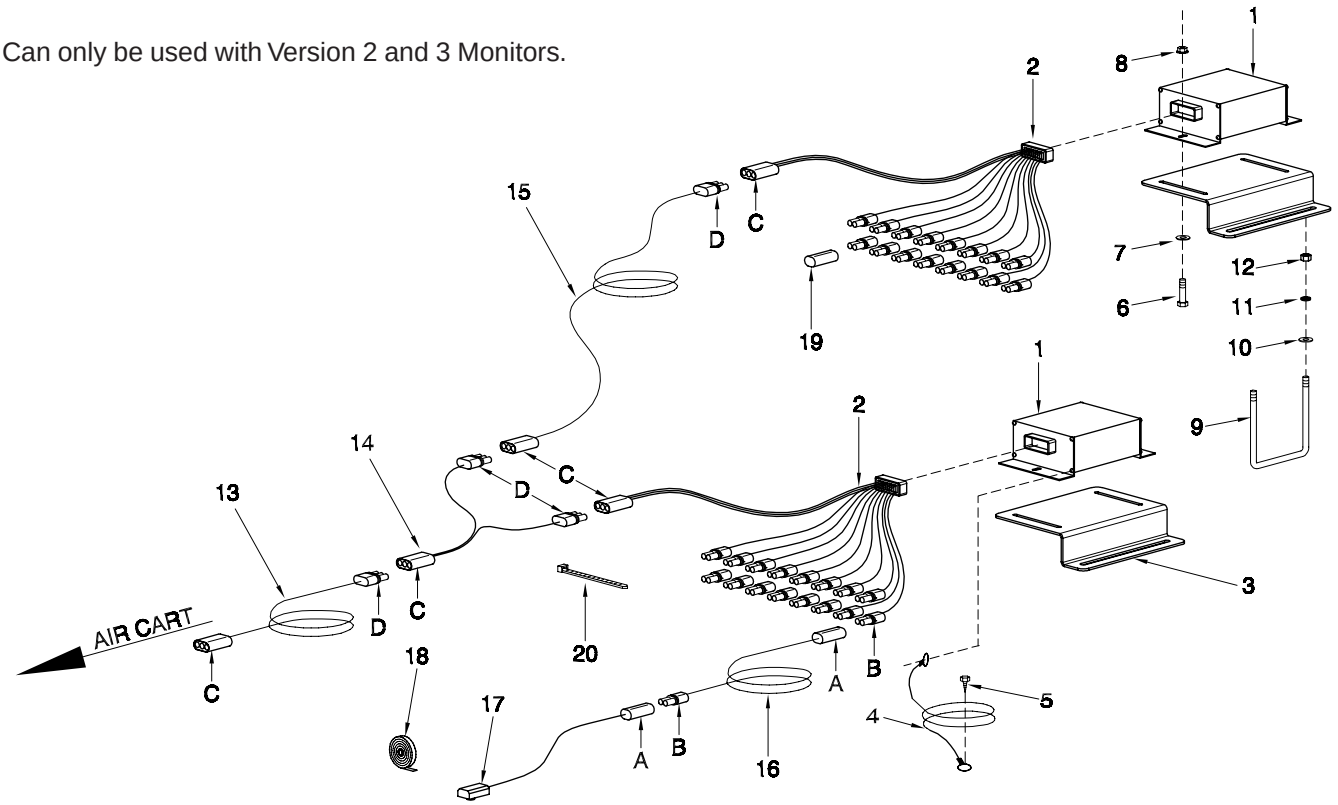

Item	Part No.	Description	Qty
1	N37011	Optical Module - Blockage	As req
2	N37012	Module Cable (Qty per Blockage Module)	1
3	N34842	Bracket - Mount (Qty per Blockage Module)	1
4	N31049	Wire - Ground - Blockage Module (Qty per Blockage Module)	1
5	N16698	Screw - 1/4 x 3/4 Self Tapping (Qty per Blockage Module)	1
6	W-469	Hex Bolt - 1/4 x 3/4 Lg (Qty per Blockage Module)	3
7	S-1198	Flatwasher- 1/4 (Qty per Blockage Module)	3
8	D-5277	Serrated Locknut - 1/4 (Qty per Blockage Module)	3
9	N15098	U-Bolt - 3/8 x 4 x 5 (Qty per Blockage Module)	1
	N36148	U-Bolt - 3/8 x 3 x 4 (Optional Qty per Blockage Module)	1
	D12714	U-Bolt - 3/8 x 2 x 2 3/4 (Optional Qty per Blockage Module)	1
10	D-5489	Flat Washer - 3/8 (Qty per Blockage Module)	2
11	W-523	Lock Washer - 3/8 (Qty per Blockage Module)	2
12	W-514	Hex Nut - 3/8 (Qty per Blockage Module)	2
13	N34795	Wire - Blockage Module (Required for 1st Module ONLY)	1
14	N34791	Y-Cable (Required for each additional Module ONLY)	1
15	N34792	Extension Cable - 5 ft Lg	As req
	N34793	Extension Cable - 10 ft Lg	As req
	N34794	Extension Cable - 20 ft Lg	As req
	N34795	Extension Cable - 30 ft Lg	As req
16	N37014	Optical Sensor Extension Cable - 5 ft Lg	As req
	N37016	Optical Sensor Extension Cable - 10 ft Lg	As req
	N37018	Optical Sensor Extension Cable - 20 ft Lg	As req
	N37020	Optical Sensor Extension Cable - 30 ft Lg	As req
17	N37013	Optical Sensor	As req
18	N34841	Rubber Tape - 30 ft roll (will do 8 sensors)	As req
19	N29334	Weather Pak Seal Connector - 2 Pin	As req
20	N34715	Nylon Tie Strap - 5.6 Lg (Qty per Pin Sensor)	2
	D-4951	Nylon Tie Strap - 7.375 Lg	18
	S13336	Nylon Tie Strap - 24 Lg	20

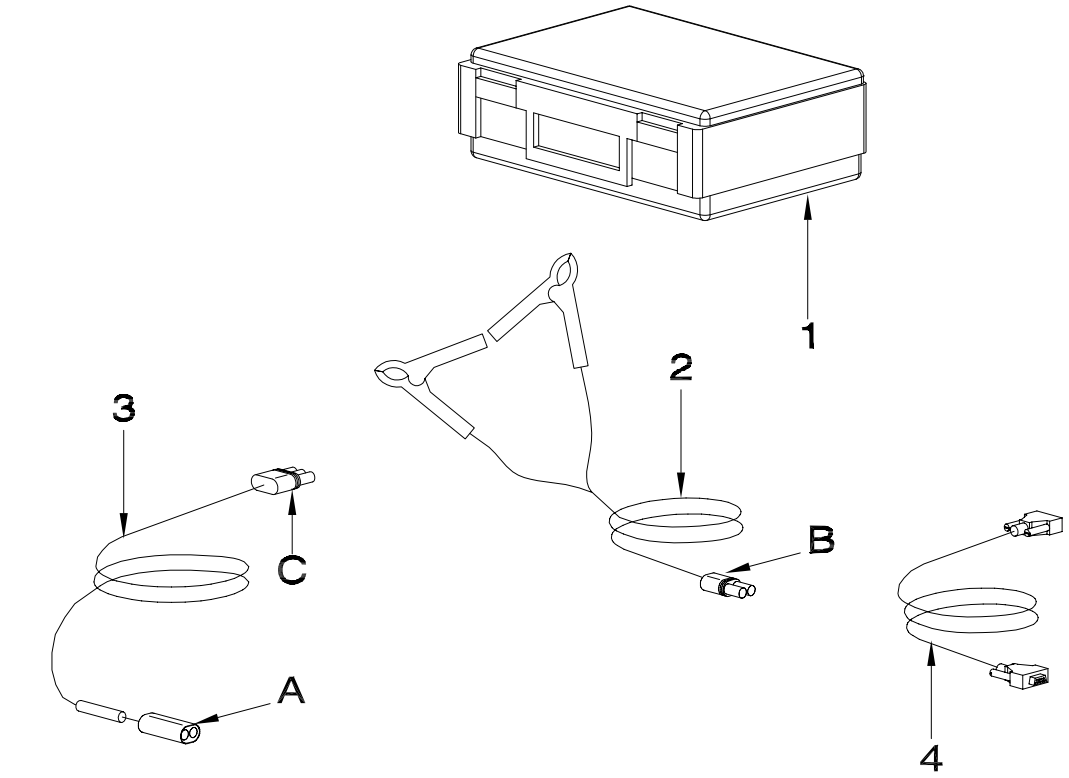

Item	Part No.	Description	Qty
		FTU - Field Test Unit	
1	N27119	FTU - Field Test Unit	1
2	N32492	Power Cable - FTU - 10 ft - Test Clip	1
3	N32491	Power Cable - 3 ft - Main	1
4	N32494	Adaptor Cable - FTU - for PC	1
5	N34177	FTU - Operation Manual (Not Shown)	1
		Replacement Connectors	
A	N29384	Weather Pak Connector - BLACK - 2 Pin Plug (Shroud)	
B	N29385	Weather Pak Connector - BLACK - 2 Pin Socket (Tower)	
C	N27614	Weather Pak Connector - BLACK - 3 Pin Socket (Tower)	

Section 9:
Variable Rate System

Section Contents

Tow Behind Hydraulics w/o Auger 9-2
Tow Behind Hydraulics w/Auger 9-4
Tow Between Hydraulics w/o Auger 9-6
Tow Between Hydraulics w/Auger 9-8
Xpress Tow Between Hydraulics w/Auger 9-10
Metering Drive 7180 / 7240 / 7300 9-12
Metering Drive 7252 9-14
Control System 9-16
Valve Manifold 9-18

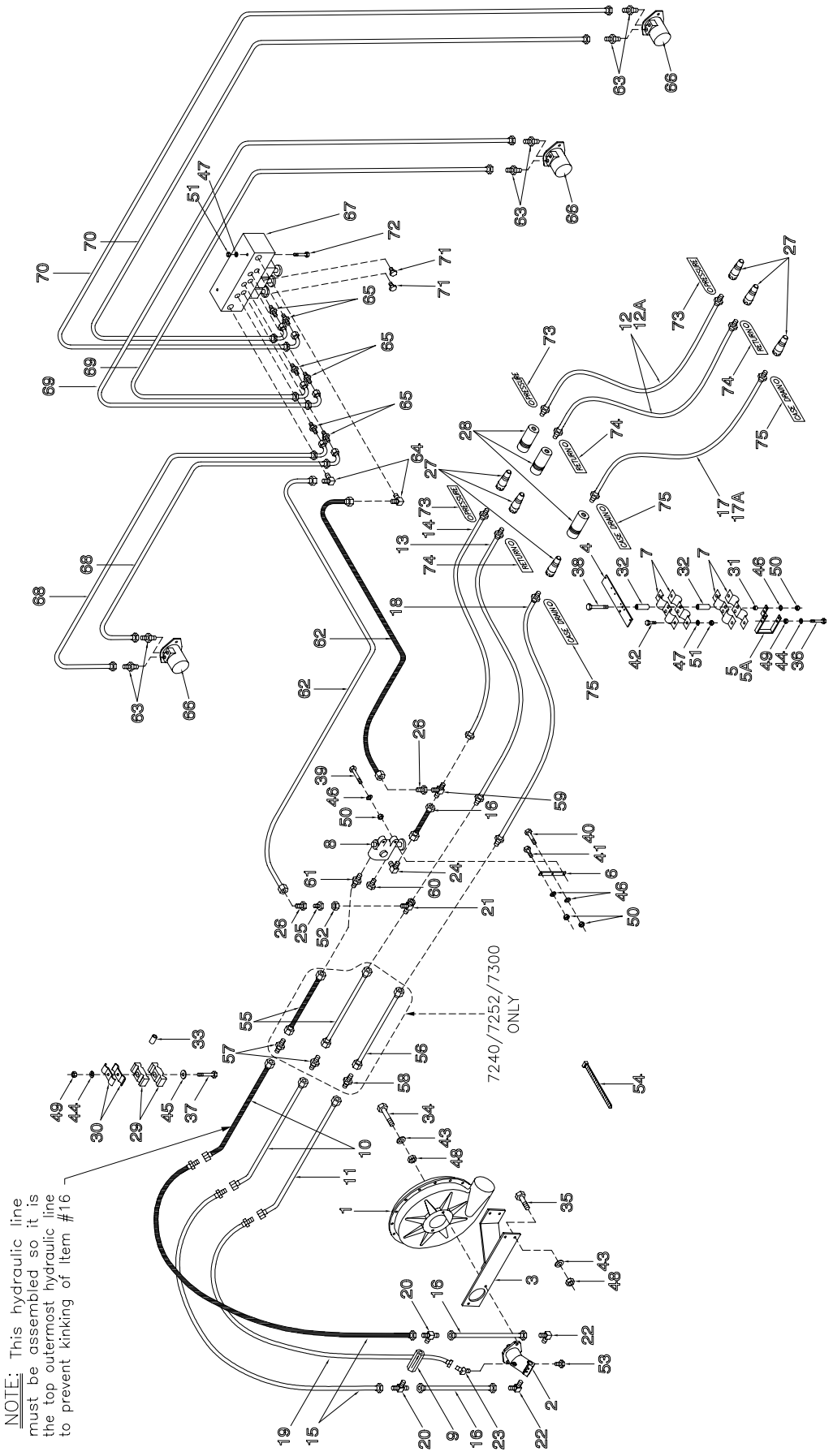
NOTE: This hydraulic line must be assembled so it is the top outermost hydraulic line to prevent kinking of Item #16
7240/7252/7300 ONLY
CHASSIS
RETURN
CASE DRAIN

Variable Rate System - Tow Behind Hydraulics w/o Auger

Item	Part No.	Description	Qty
1	N16263	Fan (See pg 7-2)	1
2	N16265	Hydraulic Motor - Rexroth - 10cc 7130	1
	N29372	Hydraulic Motor - Rexroth - 12cc 7180 / 7240 / 7300 .. (N25508 - Seal Kit) (N25507 Seal Only)	1
3	N19357	Fan Mount Bracket	1
4	N21690	Mount Bracket	1
5	N21691	Mount Bracket - 4	1
5A	N27589	Mount Bracket - 6	1
6	N19713	Strap	1
7	N16608	Pioneer Coupler Clamp	4
8	N19340	Selector Valve - 3/4 FNPT	1
	N31604	O-Ring #210 (Not Shown)	2
	N31603	Seal Kit for N19340	1
	C26358	Knob for N19340	1
9	N16399	Check Valve - 3 PSI - 1 1/16-12 ORB	1
10	N27601	Oil Line - 1 x 108 Lg w/45 Bend	2
11	N27602	Oil Line - 1/2 x 112 Lg w/45 Bend	1
12	N19442	Hyd Hose - 3/4 x 396 Lg w/1/2 MNPT	2
12A	N19452	Hyd Hose - 3/4 x 348 Lg w/1/2 MNPT	2
13	N19344	Hyd Hose - 3/4 x 222 Lg w/1 5/16-12 MJIC x 1/2 MNPT .	1
14	N19343	Hyd Hose - 3/4 x 210 Lg w/1 1/16-12 MJIC x 1/2 MNPT .	1
15	N19434	Hyd Hose - 3/4 x 35 Lg w/1 5/16-12 MJIC x 1 1/16-12 FJIC	2
16	N15991	Hyd Hose - 3/4 x 12 Lg w/1 1/16-12 FJIC	3
17	N19443	Hyd Hose - 3/8 x 396 Lg w/1/2 MNPT	1
17A	N19451	Hyd Hose - 3/8 x 348 Lg w/1/2 MNPT	1
18	N19346	Hyd Hose - 3/8 x 222 Lg w/3/4-16 MJIC x 1/2 MNPT	1
19	N19475	Hyd Hose - 3/8 x 48 Lg w/9/16-18 FJIC x 3/4-16 MJIC ...	1
20	N16388	Male Tee - (1) 1 1/16-12 ORB x (2) 1 1/16-12 MJIC	2
21	N19336	Swivel Tee - (1) 1 5/16-12 FJIC x (2) 1 5/16-12 MJIC ...	1
22	N16359	90 Elbow - 1 1/16-12 ORB x 1 1/16-12 MJIC	2
23	N19578	45 Elbow - 9/16-18 ORB x 9/16-18 MJIC	1
24	N19341	90 Elbow - 1 1/16-12 MJIC x 3/4 MNPT	1
25	N19338	Reducer - 1 1/16-12 MJIC	1
26	N19337	Reducer - 7/8-14 MJIC x 1 1/16-12 FJIC	2
27	C-817	Male Pioneer Tip - 1/2 FNPT	6
28	C-818	Pioneer Coupler - 1/2 FNPT	3
29	C-4698	Nylon Oil Line Clamp	4
30	D-4808	Oil Line Clamp	4
31	N13901	Bushing - 5/8 OD x 3/8 ID x 3/8 Lg	2
32	N19458	Spacer	4
33	N21632	Oil Line Spacer	2
34	S-1189	Hex Bolt - 1/2 x 1 3/4 Lg	2
35	S-776	Hex Bolt - 1/2 x 1 1/2 Lg	3
36	C-3918	Hex Bolt - 3/8 x 5 Lg	1
37	D-5249	Hex Bolt - 3/8 x 3 1/4 Lg	2
38	S13337	Hex Bolt - 5/16 x 6 Lg	2
39	S-1303	Hex Bolt - 5/16 x 2 Lg	1
40	C-3035	Hex Bolt - 5/16 x 1 3/4 Lg	1
41	F-1767	Hex Bolt - 5/16 x 3/4 Lg	1
42	W-469	Hex Bolt - 1/4 x 3/4 Lg	4
43	W-525	Lockwasher - 1/2	5
44	W-523	Lockwasher - 3/8	3
45	W-538	Flatwasher - 3/8	2
46	W-522	Lockwasher - 5/16	5
47	W-521	Lockwasher - 1/4	6
48	W-516	Hex Nut - 1/2	5
49	W-514	Hex Nut - 3/8	3
50	W-513	Hex Nut - 5/16	5
51	W-512	Hex Nut - 1/4	6
52	N19432	Nut - 1 5/16-12 JIC	1
53	N16621	Plug - 9/16-18 ORB	1
54	D-4838	Tie Strap	15
55	N28659	Oil Line - 1 x 26 Lg 7240 / 7252 / 7300 ONLY	2
56	N28658	Oil Line - 1/2 x 26 Lg 7240 / 7252 / 7300 ONLY	1
57	N16346	Conector - 1 5/16-12 MJIC 7240 / 7252 / 7300 ONLY.	2
58	N25754	Conector - 3/4-16 MJIC 7240 / 7252 / 7300 ONLY	1
59	N19549	Tee - (3) 1 1/16-12 MJIC	1
60	N29357	Plug - 3/4 MNPT	1
61	N29349	Connector - 1 5/16-12 MJIC x 3/4 MNPT	1
62	C26259	Hyd Hose - 1/2 x 108 LGg w/7/8-14 FJIC 7130 / 7180 ...	2
	N19345	Hyd Hose - 1/2 x 132 LGg w/7/8-14 FJIC 7240 / 7300 ..	2
63	N29359	Connector - 3/4-16 MJIC x 7/8-14 ORB	6
64	N29360	90 Elbow - 7/8-14 MJIC x 7/8-14 ORB	2
65	N29358	Connector - 3/4-16 MJIC x 9/16-18 ORB	6
66	N29319	Hydraulic Motor - DANFOSS	3
	N32517	Seal Kit for DANFOSS motor	
	N42365	Seal Kit for WHITE RS series motor	
67	N29320	Valve Manifold Assembly (See Pg. 10-15)	1
68	N29362	Hyd Hose - 3/8 x 48 Lg w/3/4-16 FJIC 7130 / 7180 ...	2
	N29363	Hyd Hose - 3/8 x 60 Lg w/3/4-16 FJIC 7240 / 7300	2
69	N29361	Hyd Hose - 3/8 x 36 Lg w/3/4-16 FJIC	2
70	N29363	Hyd Hose - 3/8 x 60 Lg w/3/4-16 FJIC 7130 / 7180 ...	2
	N29364	Hyd Hose - 3/8 x 72 Lg w/3/4-16 FJIC 7240 / 7300 ...	2
	N31625	Hyd Hose - 3/8 x 84 Lg w/3/4-16 FJIC 7252	2
71	N29365	Plug - 9/16-18 ORB	2
72	W-1847	Hex Bolt - 1/4 x 5 Lg	2
73	N29962	Tag - Hose ID - Air Tank - Fan/Auger - PRESSURE	3
74	N29963	Tag - Hose ID - Air Tank - Fan/Auger - RETURN	3
75	N29964	Tag - Hose ID - Air Tank - Fan/Auger - CASE DRAIN	3
	N19023	Decal - “Hot” (Not Shown)	1
	N19031	Decal - “Auger - Fan” (Not Shown)	1
	N29354	Decal - “Calibration - Fan” (Not Shown)	1

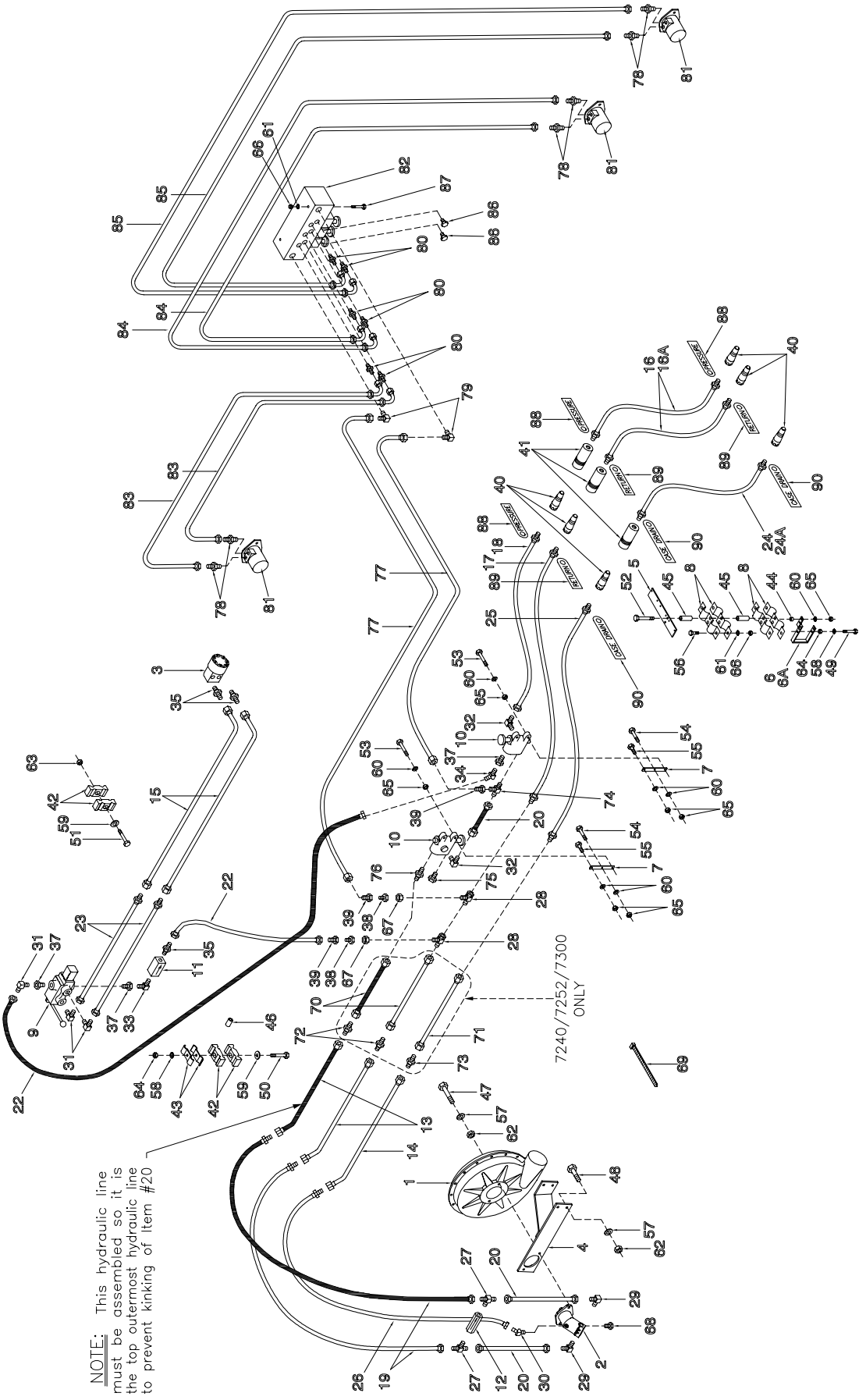
7240/7252/7300
ONLY
NOTE: This hydraulic line must be assembled so it is the top outermost hydraulic line to prevent kinking of item #20

Item	Part No.	Description	Qty
1	N16263	Fan (See pg. 7-2)	1
2	N16265	Hydraulic Motor - Rexroth - 10cc 7130	1
	N29372	Hydraulic Motor - Rexroth - 12cc 7180 / 7240 / 7252 / 7300 (N25508 - Seal Kit) (N25507 Seal Only)	1
3	N15982	Orbit Motor	1
	N16731	Seal Kit for N15982	
	N25319	Shaft for N15982	
4	N19357	Fan Mount Bracket	1
5	N21690	Mount Bracket	1
6	N21691	Mount Bracket - 4	1
6A	N27589	Mount Bracket - 6	1
7	N19713	Strap	2
8	N16608	Pioneer Coupler Clamp	4
9	N15024	Control Valve)	1
	N31605	Seal kit for N15204	
	N24595	Handle for N15204	
10	N19340	Selector Valve - 3/4 FNPT	2
	N31604	O-Ring #210 (Not Shown)	
	N31603	Seal Kit for N19340	
	C26358	Knob for N19340	
11	N15023	Check Valve - 1/2 FNPT	1
12	N16399	Check Valve - 3 PSI - 1 1/16-12 ORB	1
13	N27601	Oil Line - 1 x 108 Lg w/45 Bend	2
14	N27602	Oil Line - 1/2 x 112 Lg w/45 Bend	1
15	F-4560	Oil Line - 5/8 x 99 Lg w/90 Bend	2
16	N19442	Hyd Hose - 3/4 x 396 Lg w/1/2 MNPT	2
16A	N19452	Hyd Hose - 3/4 x 348 Lg w/1/2 MNPT	2
17	N19344	Hyd Hose - 3/4 x 222 Lg w/1 5/16-12 MJIC x 1/2 MNPT	1
18	N19343	Hyd Hose - 3/4 x 210 Lg w/1 1/16-12 MJIC x 1/2 MNPT	1
19	N19434	Hyd Hose - 3/4 x 35 Lg w/1 5/16-12 MJIC x 1 1/16-12 FJIC	2
20	N15991	Hyd Hose - 3/4 x 12 Lg w/1 1/16-12 FJIC	3
22	N19365	Hyd Hose - 1/2 x 140 Lg w/7/8-14 MJIC x 7/8-14 FJIC Used on 7130 / 7180 / 7252	2
	N21721	Hyd Hose - 1/2 x 180 Lg w/7/8-14 MJIC x 7/8-14 FJIC Used on 7240 / 7300	2
23	C-4387	Hyd Hose - 1/2 x 36 Lg w/7/8-14 MJIC x 7/8-14 FJIC	2
24	N19443	Hyd Hose - 3/8 x 396 Lg w/1/2 MNPT	1
24A	N19451	Hyd Hose - 3/8 x 348 Lg w/1/2 MNPT	1
25	N19346	Hyd Hose - 3/8 x 222 Lg w/3/4-16 MJIC x 1/2 MNPT	1
26	N19475	Hyd Hose - 3/8 x 48 Lg w/9/16-18 FJIC x 3/4-16 MJIC	1
27	N16388	Male Tee - (1) 1 1/16-12 ORB x (2) 1 1/16-12 MJIC	2
28	N19336	Swivel Tee - (1) 1 5/16-12 FJIC x (2) 1 5/16-12 MJIC	2
29	N16359	90 Elbow - 1 1/16-12 ORB x 1 1/16-12 MJIC	2
30	N19578	45 Elbow - 9/16-18 ORB x 9/16-18 MJIC	1
31	C-4400	90 Elbow - 1/2 MNPT x 7/8-14 MJIC	3
32	N19341	90 Elbow - 1 1/16-12 MJIC x 3/4 MNPT	2
33	N15033	90 Elbow - 1/2 MNPT	1
34	C-4402	45 Elbow - 1/2 MNPT x 7/8-14 MJIC	1
35	C-4399	Adapter - 1/2 MNPT x 7/8-14 MJIC	3
37	N15032	Reducer - 3/4 MNPT x 1/2 FNPT	3
38	N19338	Reducer - 1 1/16-12 MJIC	2
39	N19337	Reducer - 7/8-14 MJIC x 1 1/16-12 FJIC	3
40	C-817	Male Pioneer Tip - 1/2 FNPT	6
41	C-818	Pioneer Coupler - 1/2 FNPT	3
42	C-4698	Nylon Oil Line Clamp	8
43	D-4808	Oil Line Clamp	4
44	N13901	Bushing - 5/8 OD x 3/8 ID x 3/8 Lg	2
45	N19458	Spacer	4
46	N21632	Oil Line Spacer	2

Item	Part No.	Description	Qty
47	S-1189	Hex Bolt - 1/2 x 1 3/4 Lg	2
48	S-776	Hex Bolt - 1/2 x 1 1/2 Lg	3
49	C-3918	Hex Bolt - 3/8 x 5 Lg	1
50	D-5249	Hex Bolt - 3/8 x 3 1/4 Lg	2
51	W-479	Hex Bolt - 3/8 x 2 1/4 Lg	2
52	S13337	Hex Bolt - 5/16 x 6 Lg	2
53	S-1303	Hex Bolt - 5/16 x 2 Lg	2
54	C-3035	Hex Bolt - 5/16 x 1 3/4 Lg	2
55	F-1767	Hex Bolt - 5/16 x 3/4 Lg	2
56	W-469	Hex Bolt - 1/4 x 3/4 Lg	4
57	W-525	Lockwasher - 1/2	5
58	W-523	Lockwasher - 3/8	3
59	W-538	Flatwasher - 3/8	4
60	W-522	Lockwasher - 5/16	8
61	W-521	Lockwasher - 1/4	6
62	W-516	Hex Nut - 1/2	3
63	D-5279	Serrated Locknut - 3/8	2
64	W-514	Hex Nut - 3/8	3
65	W-513	Hex Nut - 5/16	8
66	W-512	Hex Nut - 1/4	6
67	N19432	Nut - 1 5/16-12 JIC	2
68	N16621	Plug - 9/16-18 ORB	1
69	D-4838	Tie Strap	15
70	N28659	Oil Line - 1 x 26 Lg 7240 / 7252 / 7300 ONLY	2
71	N28658	Oil Line - 1/2 x 26 Lg 7240 / 7252 / 7300 ONLY	1
72	N16346	Conector - 1 5/16-12 MJIC 7240 / 7252 / 7300 ONLY	2
73	N25754	Conector - 3/4-16 MJIC 7240 / 7252 / 7300 ONLY	1
74	N29366	Tee - (2) 1 1/16-12 MJIC x (1) 3/4 MNPT	1
75	N29357	Plug - 3/4 MNPT	1
76	N29349	Connector - 1 5/16-12 MJIC x 3/4 MNPT	1
77	C26259	Hyd Hose - 1/2 x 108 LGg w/7/8-14 FJIC 7130 / 7180	2
	N19345	Hyd Hose - 1/2 x 132 LGg w/7/8-14 FJIC 7240 / 7252 / 7300	2
78	N29359	Connector - 3/4-16 MJIC x 7/8-14 ORB	6
79	N29360	90 Elbow - 7/8-14 MJIC x 7/8-14 ORB	2
80	N29358	Connector - 3/4-16 MJIC x 9/16-18 ORB	6
81	N29319	Hydraulic Motor - DANFOSS	3
	N32517	Seal Kit for DANFOSS motor	
	N42365	Seal Kit for WHITE RS series motor	
82	N29320	Valve Manifold Assembly (See pg.10-15 for Details)	1
83	N29362	Hyd Hose - 3/8 x 48 Lg w/3/4-16 FJIC 7130 / 7180	2
	N29363	Hyd Hose - 3/8 x 60 Lg w/3/4-16 FJIC 7240 / 7252 / 7300 .	2
84	N29361	Hyd Hose - 3/8 x 36 Lg w/3/4-16 FJIC	2
85	N29363	Hyd Hose - 3/8 x 60 Lg w/3/4-16 FJIC 7130 / 7180	2
	N29364	Hyd Hose - 3/8 x 72 Lg w/3/4-16 FJIC 7240 / 7300	2
	N31625	Hyd Hose - 3/8 x 84 Lg w/3/4-16 FJIC 7252	2
86	N29365	Plug - 9/16-18 ORB	2
87	W-1847	Hex Bolt - 1/4 x 5 Lg	2
88	N29962	Tag - Hose ID - Air Tank - Fan/Auger - PRESSURE	3
89	N29963	Tag - Hose ID - Air Tank - Fan/Auger - RETURN	3
90	N29964	Tag - Hose ID - Air Tank - Fan/Auger - CASE DRAIN	3
91	N31606	Seal #555-001 (Not Shown)	2
	N19023	Decal - “Hot” (Not Shown)	1
	N19031	Decal - “Auger - Fan” (Not Shown)	1
	N29354	Decal - “Calibration - Fan” (Not Shown)	1

Variable Rate System
Tow Between Hydraulics w/o Auger

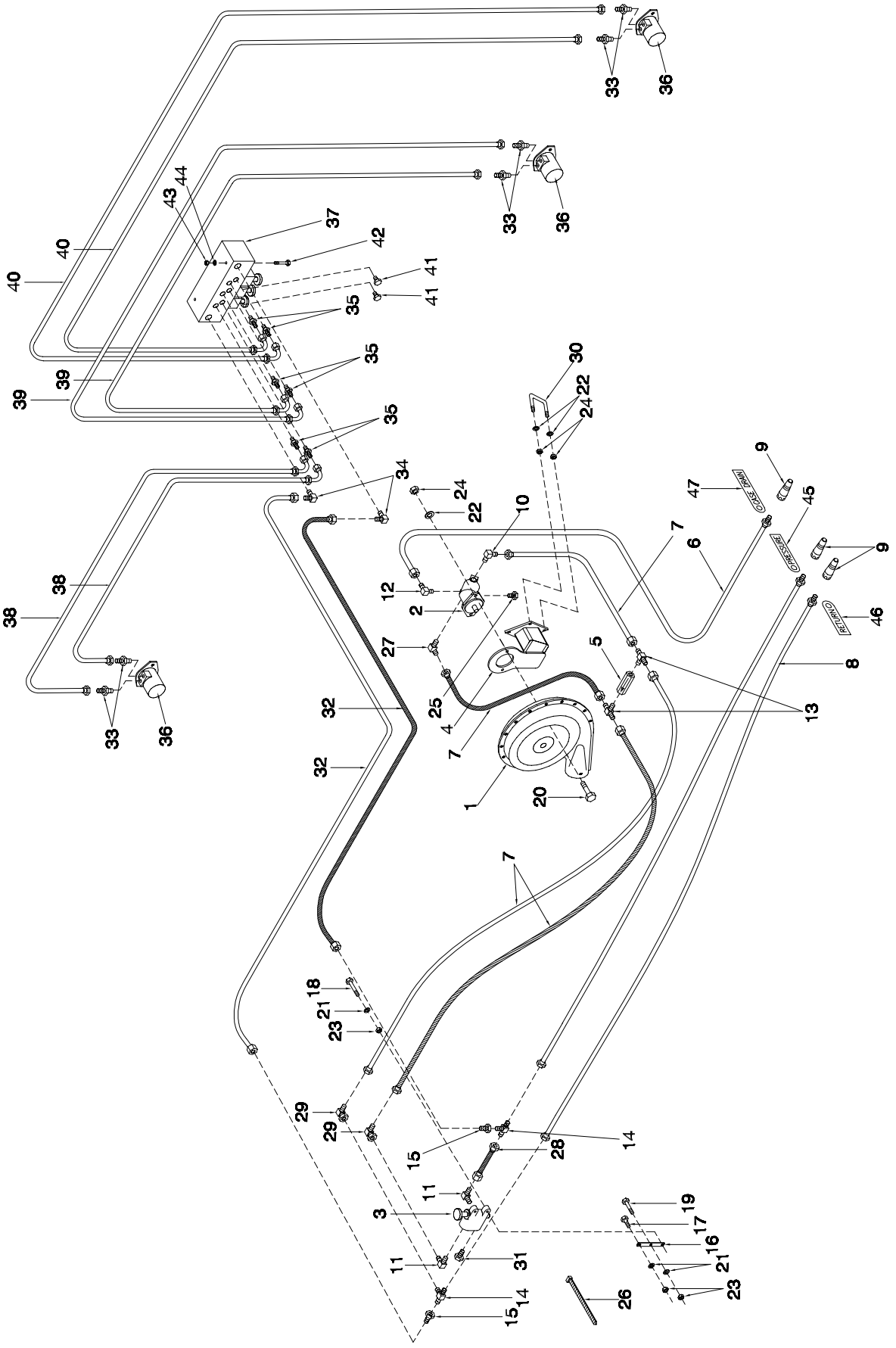

Variable Rate System - Tow Between Hydraulics w/o Auger

Item	Part No.	Description	Qty
1	N16263	Fan (See pg 7-2)	1
2	N16265	Hydraulic Motor - Rexroth - 10cc 7130	1
	N29372	Hydraulic Motor - Rexroth - 12cc 7180 / 7240 / 7252 / 7300	1
		(N25508 - Seal Kit) (N25507 Seal Only)	
3	N19340	Selector Valve - 3/4 FNPT	1
	N31604	O-Ring #210 (Not Shown)	
	N31603	Seal Kit for N19340	
	C26358	Knob for N19349	
4	N31032	Fan Mount Bracket 7180	1
	N31033	Fan Mount Bracket 7240 / 7300	1
	N31342	Fan Mount Bracket 7252	1
5	N16399	Check Valve - 0 PSI - 1 1/16-12 ORB	1
6	N16181	Hyd Hose - 3/8 x 156 Lg w/9/16-18 FJIC x 1/2 MNPT	1
7	N25644	Hyd Hose - 3/4 x 35 Lg w/1 1/16-12 FJIC	4
8	N16454	Hyd Hose - 3/4 x 130 w/1 1/16-12 FJIC x 1/2 MNPT	2
9	C-817	Male Pioneer Tip - 1/2 FNPT	3
10	N16359	90 Male Elbow - 1 1/16-12 MJIC x 1 1/16-12 ORB	1
11	N19341	90 Male Elbow - 1 1/16-12 MJIC x 3/4 MNPT	2
12	N16143	90 Male Elbow - 9/16-18 MJIC x 9/16-18 ORB	1
13	N16388	Male Tee - (2) 1 1/16-12 JIC x (1) 1 1/16-12 ORB	2
14	N19549	Male Tee - (3) 1 1/16-12 JIC	2
15	N19337	Reducer - 7/8-14 MJIC x 1 1/16-12 FJIC	2
16	N19713	Strap	1
17	F-1767	Hex Bolt - 5/16 x 3/4 Lg	1
18	C-3035	Hex Bolt - 5/16 x 1 3/4 Lg	1
19	S-1303	Hex Bolt - 5/16 x 2 Lg	1
20	S-1189	Hex Bolt - 1/2 x 1 3/4 Lg	2
21	W-522	Lockwasher - 5/16	3
22	W-525	Lockwasher - 1/2	6
23	W-513	Hex Nut - 5/16	6
24	W-516	Hex Nut - 1/2	6
25	N16621	Plug - 9/16-18 ORB	1
26	D-4838	Nylon Tie Strap (black) - 14 1/2 Lg	10
27	N31096	45 Male Elbow - 1 1/16-12 MJIC x 1 1/16-12 ORB	1
28	N15991	Hyd Hose - 3/4 x 12 Lg w/1 1/16-12 FJIC	1
29	N21189	90 Male Elbow - 1 1/16-12 MJIC x 1 1/16-12 FJIC	2
30	H21351	U-Bolt - 1/2 x 6 1/16 x 5 1/16 7180	2
	N31034	U-Bolt - 1/2 x 8 1/16 x 5 1/8 7240 / 7252 / 7300	2
31	N29357	Male Plug - 3/4 MNPT	1
32	N19345	Hyd Hose - 1/2 x 132 Lg w/7/8-14 FJIC 7180	2
	C26343	Hyd Hose - 1/2 x 162 Lg w/7/8-14 FJIC 7240 / 7252 / 7300	2
33	N29359	Connector - 3/4-16 MJIC x 7/8-14 ORB	6
34	C15318	90 Male Elbow - 7/8-14 MJIC x 7/8-14 ORB	2
35	N29358	Connector - 3/4-16 MJIC x 9/16-18 ORB	6
36	N29319	Hydraulic Motor - DANFOSS	3
	N32517	Seal Kit for DANFOSS motor	
	N42365	Seal Kit for WHITE RS series motor	
37	N29320	Valve Manifold Assembly (See pg. 10-15 for Details)	1
38	N29362	Hyd Hose - 3/8 x 48 Lg w/ 3/4-16 FJIC 7180	2
	N29363	Hyd Hose - 3/8 x 60 Lg w/ 3/4-16 FJIC 7240 / 7252 / 7300	2
39	N29361	Hyd Hose - 3/8 x 36 Lg w/3/4-16 FJIC	2
40	N29363	Hyd Hose - 3/8 x 60 Lg w/3/4-16 FJIC 7180	2
	N29364	Hyd Hose - 3/8 x 72 Lg w/3/4-16 FJIC 7240 / 7300	2
	N31625	Hyd Hose - 3/8 x 84 Lg w/3/4-16 FJIC 7252	2
41	N29365	Male Plug - 9/16-18 ORB	2
42	W-1847	Hex Bolt - 1/4 x 5 Lg	2
43	W-512	Hex Nut - 1/4	2
44	W-521	Lockwasher - 1/2	2
45	N29962	Tag - Hose ID - Air Tank - Fan/Auger - PRESSURE	1
46	N29963	Tag - Hose ID - Air Tank - Fan/Auger - RETURN	1
47	N29964	Tag - Hose ID - Air Tank - Fan/Auger - CASE DRAIN	1
	N19023	Decal - “Hot” (Not Shown)	1
	N19031	Decal - “Auger - Fan” (Not Shown)	1
	N29354	Decal - “Calibration - Fan” (Not Shown)	1

Variable Rate System
Tow Between Hydraulics w/Auger

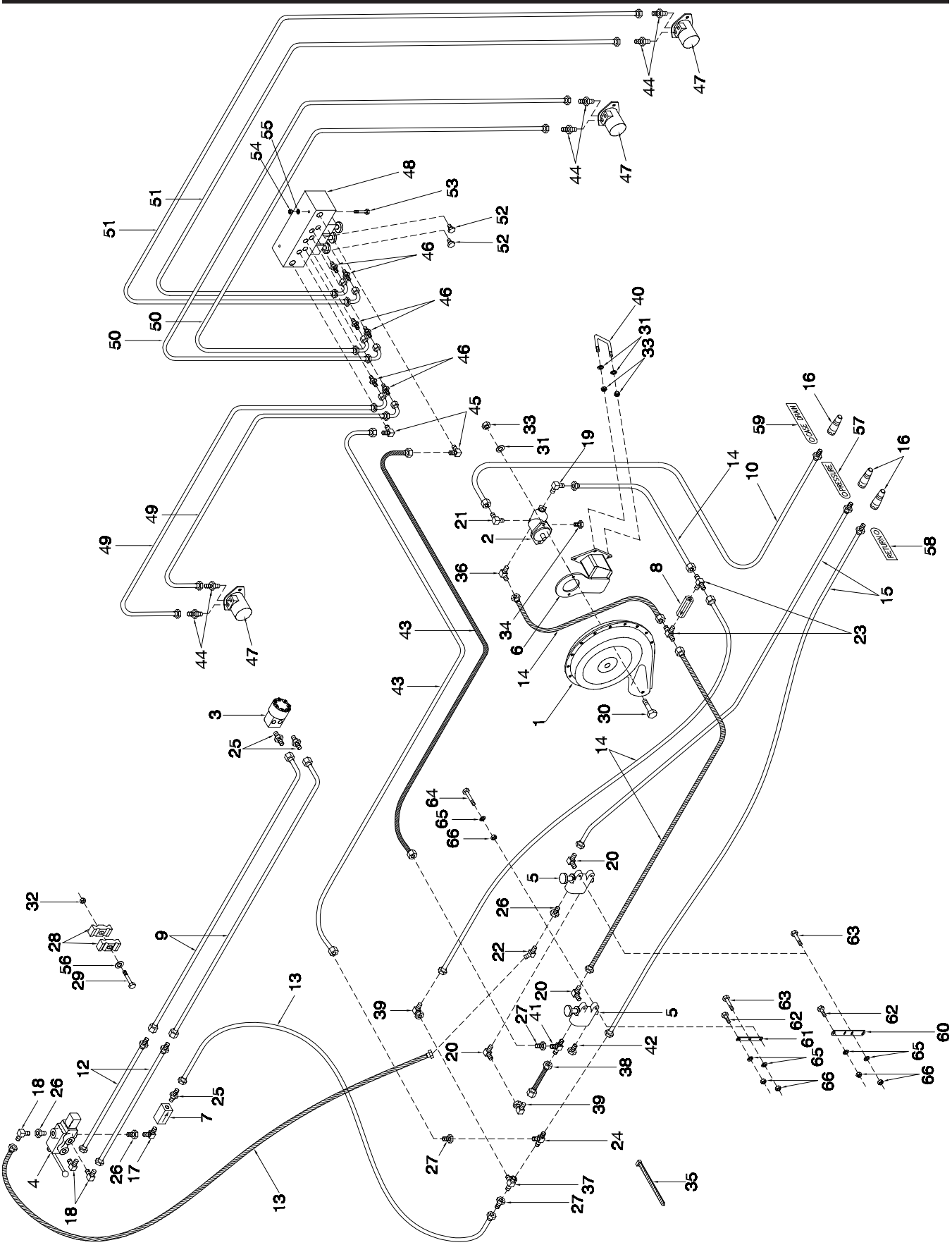

Variable Rate System - Tow Between Hydraulics w/Auger

Item	Part No.	Description	Qty
1	N16263	Fan (See pg 72)	1
2	N16265	Hydraulic Motor - Rexroth - 10cc 7130	1
	N29372	Hydraulic Motor - Rexroth - 12cc 7180 / 7240 / 7252 / 73001	
	N25508	Seal Kit for Rexroth Motors	
	N25507	Seal Only for Rexroth Motors	
3	N15982	Orbit Motor	1
	N16731	Seal Kit for N15982	
	N25319	Shaft for N15982	
4	N15024	Control Valve	1
	N31606	Seal #555-001 (Not Shown)	2
	N31605	Seal Kit for N15204	1
	N24595	Handle for N15204	1
5	N19340	Selector Valve - 3/4 FNPT	2
	N31604	O-Ring #210 (Not Shown)	2
	N31603	Seal Kit for N19340	
	C26358	Knob for N19340	
6	N31032	Fan Mount Bracket 7180	1
	N31033	Fan Mount Bracket 7240 / 7300	1
	N31342	Fan Mount Bracket 7252	1
7	N15023	Check Valve - 1/2 FNPT	1
8	N16399	Check Valve - 0 PSI - 1 1/16-12 ORB	1
9	F-4560	Oil Line - 5/8 x 99 Lg w/90 Bend	2
10	N16181	Hyd Hose - 3/8 x 156 Lg w/9/16-18 FJIC x 1/2 MNPT	1
12	C-4387	Hyd Hose - 1/2 x 36 Lg w/7/8-14 MJIC x 7/8-14 FJIC	2
13	N19365	Hyd Hose - 1/2 x 140 Lg w/7/8-14 MJIC x 7/8-14 FJIC 7180	2
	C26343	Hyd Hose - 1/2 x 162 Lg w/7/8-14 MJIC x 7/8-14 FJIC 7252	2
	N21721	Hyd Hose - 1/2 x 180 Lg w/7/8-14 MJICx7/8-14 FJIC Used on 7240 / 7300	2
14	N25644	Hyd Hose - 3/4 x 35 Lg w/1 1/16-12 FJIC	4
15	N16454	Hyd Hose - 3/4 x 130 w/1 1/16-12 FJIC x 1/2 MNPT	2
16	C-817	Male Pioneer Tip - 1/2 FNPT	3
17	N15033	90 Male Elbow - 1/2 MNPT	1
18	C-4400	90 Male Elbow - 7/8-14 MJIC x 1/2 MNPT	3
19	N16359	90 Male Elbow - 1 1/16-12 MJIC x 1 1/16-12 ORB	1
20	N19341	90 Male Elbow - 1 1/16-12 MJIC x 3/4 MNPT	3
21	N16143	90 Male Elbow - 9/16-18 MJIC x 9/16-18 ORB	1
22	C-4402	45 Male Elbow - 7/8-14 MJIC x 1/2 MNPT	1
23	N16388	Male Tee - (2) 1 1/16-12 JIC x (1) 1 1/16-12 ORB	2
24	N19549	Male Tee - (3) 1 1/16-12 JIC	1
25	C-4399	Connector - 7/8-14 MJIC x 1/2 MNPT	3
26	N15032	Reducer - 3/4 MNPT x 1/2 FNPT	3
27	N19337	Reducer - 7/8-14 MJIC x 1 1/16-12 FJIC	3
28	C-4698	Nylon Oil Line Clamp	4
29	W-479	Hex Bolt - 3/8 x 2 1/4 Lg	2
30	S-1189	Hex Bolt - 1/2 x 1 3/4 Lg	2
31	W-525	Lockwasher - 1/2	6
32	D-5279	Serrated Locknut - 3/8	2
33	W-516	Hex Nut - 1/2	6
34	N16621	Plug - 9/16-18 ORB	1
35	D-4838	Nylon Tie Strap (black) - 14 1/2 Lg	4
36	N31096	45 Male Elbow - 1 1/16-12 MJIC x 1 1/16-12 ORB	1
37	N29356	Tee - (2) 1 1/16-12 MJIC x (1) 1 1/16-12 FJIC	1
38	N15991	Hyd Hose - 3/4 x 12 Lg w/1 1/16-12 FJIC	1
39	N21189	Elbow - 1 1/16-12 MJIC x 1 1/16-12 FJIC	2
40	H21351	U-Bolt - 1/2 x 6 1/16 x 5 1/16 7180	2
	N31034	U-Bolt - 1/2 x 8 1/16 x 5 1/8 7240 / 7252 / 7300	2
41	N29366	Tee - (2) 1 1/16-12 MJIC x (1) 3/4 MNPT	1
42	N29357	Male Plug - 3/4 MNPT	1
43	N19345	Hyd Hose - 1/2 x 132 Lg w/7/8-14 FJIC 7180	2
	C26343	Hyd Hose - 1/2 x 162 Lg w/7/8-14 FJIC 7240 / 7252 / 7300	2
44	N29359	Connector - 7/8-14 MJIC x 3/4-16 MJIC	6
45	C15318	90 Male Elbow - 7/8-14 MJIC x 7/8-14 ORB	2
46	N29358	Connector - 3/4-16 MJIC x 9/16-18 ORB	6
47	N29319	Hydraulic Motor - DANFOSS	3
	N32517	Seal Kit for DANFOSS motor	
	N42365	Seal Kit for WHITE RS series motor	
48	N29320	Valve Manifold Assembly (See pg. 10-15)	1
49	N29362	Hyd Hose - 3/8 x 48 Lg w/3/4-16 FJIC 7180	2
	N29363	Hyd Hose - 3/8 x 60 Lg w/3/4-16 FJIC 7240 / 7252 / 7300	2
50	N29361	Hyd Hose - 3/8 x 36 Lg w/3/4-16 FJIC	2
51	N29363	Hyd Hose - 3/8 x 60 Lg w/3/4-16 FJIC 7180	2
	N29364	Hyd Hose - 3/8 x 72 Lg w/3/4-16 FJIC 7240 / 7300	2
	N31625	Hyd Hose - 3/8 x 84 Lg w/3/4-16 FJIC 7252	2
52	N29365	Male Plug - 9/16-18 ORB	2
53	W-1847	Hex Bolt - 1/4 x 5 Lg	2
54	W-512	Hex Nut - 1/4	2
55	W-521	Lockwasher - 1/4	2
56	W-538	Flatwasher - 3/8	2
57	N29962	Tag - Hose ID - Air Tank - Fan/Auger - PRESSURE	1
58	N29963	Tag - Hose ID - Air Tank - Fan/Auger - RETURN	1
59	N29964	Tag - Hose ID - Air Tank - Fan/Auger - CASE DRAIN	1
60	N29393	Strap	1
61	N19713	Strap	1
62	F-1767	Hex Bolt - 5/16 x 3/4 Lg	3
63	C-3035	Hex Bolt - 5/16 x 1 3/4 Lg	3
64	S-1303	Hex Bolt - 5/16 x 2 Lg	1
65	W-522	Lockwasher - 5/16	7
66	W-513	Hex Nut - 5/16	7
	N19023	Decal - “Hot” (Not Shown)	1
	N19031	Decal - “Auger - Fan” (Not Shown)	1
	N29354	Decal - “Calibration - Fan” (Not Shown)	1

Variable Rate System
Xpress Tow Between Hydraulics w/Auger

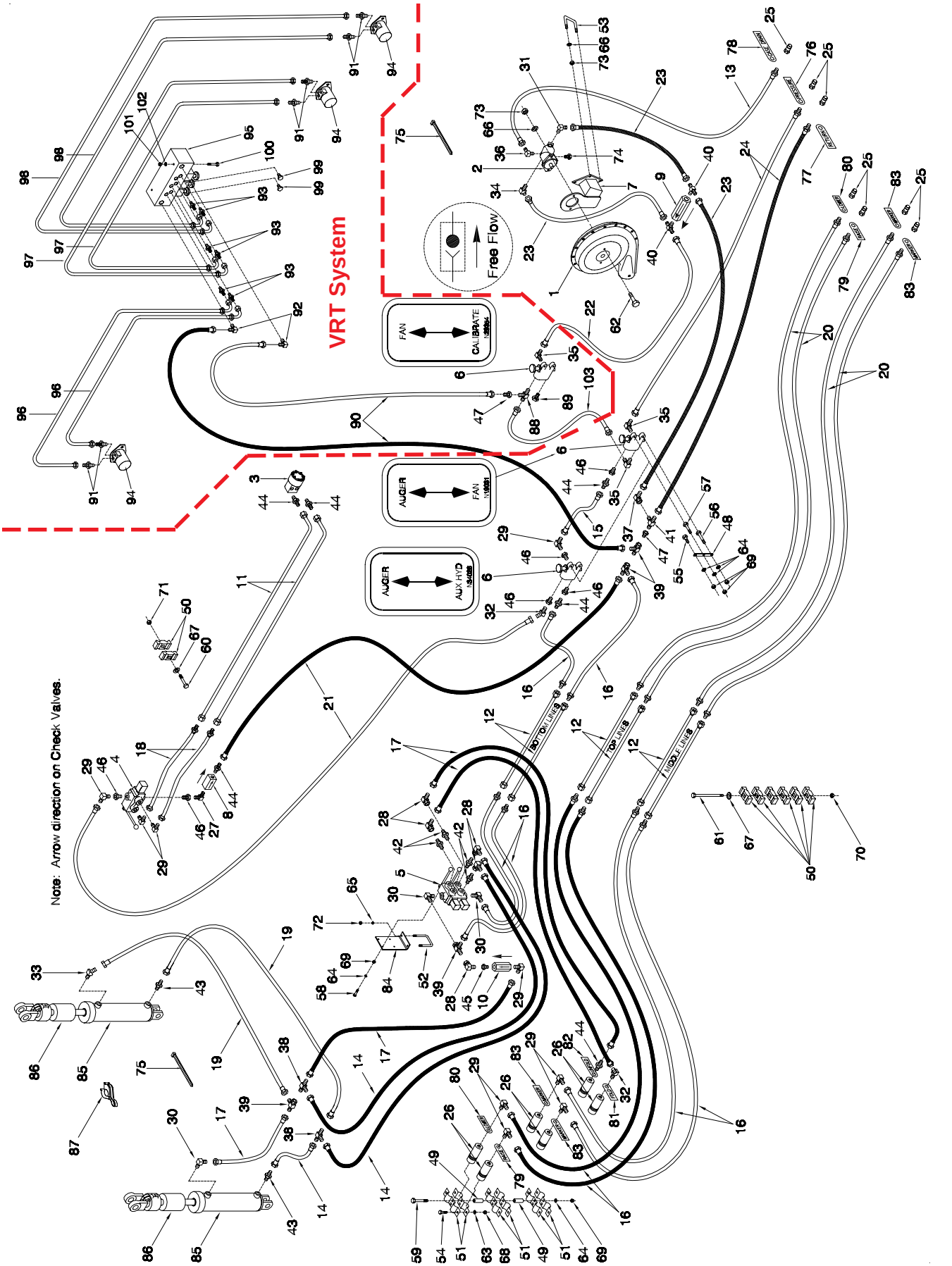

Variable Rate System - Xpress Tow Between Hydraulics w/Auger

Item	Part No.	Description	Qty
1	N16263	Fan (See pg 7-2)	1
2	N29372	Hydraulic Motor - Rexroth - 12cc	1
	N25508	Seal Kit for Rexroth Motors - 12cc	
	N25507	Seal Only for Rexroth Motors 12cc	
3	N15982	Orbit Motor	1
	N16731	Seal Kit for N15982	
	N25319	Shaft for N15982	
4	N15024	Control Valve	1
	N31605	Seal Kit for N15024	
	N24595	Handle for N15024	
5	N34048	Control Valve - Dbl Spool	1
	N34087	Seal Kit for N34048	
	N34051	Handle for N34048	
6	N19340	Selector Valve - 3/4 FNPT	2
	N31603	Seal Kit for N19340	
	C36358	Knob for N19340	
7	N31032	Fan Mount Bracket 7180	1
	N31033	Fan Mount Bracket 7240	1
8	N15023	Check Valve - 1/2 FNPT	1
9	N16399	Check Valve - 0 PSI - 1 1/16-12 ORB	1
10	H-5545	Check Valve - 1/2 FNPT	1
11	F-4560	Oil Line - 5/8 x 99 Lg w/90 Bend	2
12	C-4367	Oil Line - 5/8 x 80 Lg (7180)	6
	C-4369	Oil Line - 5/8 x 96 Lg (7240)	6
13	N16181	Hyd Hose - 3/8 x 156 Lg w/9/16-18 FJIC x 1/2 MNPT	1
14	N34366	Hyd Hose - 1/2 x 12 Lg w/7/8-14 FJIC	3
15	C-4383	Hyd Hose - 1/2 x 20 Lg w/7/8-14 FJIC	1
16	C-4385	Hyd Hose - 1/2 x 24 Lg w/7/8-14 MJIC x 7/8-14 FJIC	8
17	C-4468	Hyd Hose - 1/2 x 24 Lg w/7/8-14 FJIC x 7/8-14 FJIC	4
18	C-4387	Hyd Hose - 1/2 x 36 Lg w/7/8-14 MJIC x 7/8-14 FJIC (7180)	2
	C-4389	Hyd Hose - 1/2 x 60 Lg w/7/8-14 MJIC x 7/8-14 FJIC (7240)	2
19	C18779	Hyd Hose - 1/2 x 72 Lg w/7/8-14 FJIC x 7/8-14 FJIC	2
20	N19548	Hyd Hose - 1/2 x 132 Lg w/7/8-14 MJIC x 1/2 MNPT	4
21	N19365	Hyd Hose - 1/2 x 140 Lg w/7/8-14 MJIC x 7/8-14 FJIC (7180)	2
	N21721	Hyd Hose - 1/2 x 180 Lg w/7/8-14 MJIC x 7/8-14 FJIC (7240)	2
22	N15991	Hyd Hose - 3/4 x 12 Lg w/1 1/16-12 FJIC	1
23	N25644	Hyd Hose - 3/4 x 35 Lg w/1 1/16-12 FJIC	3
24	N16454	Hyd Hose - 3/4 x 130 w/1 1/16-12 FJIC x 1/2 MNPT	2
25	C-817	Male Pioneer Tip - 1/2 FNPT	7
26	C-818	Pioneer Coupler - 1/2 FNPT	6
27	N15033	90 Elbow - 7/8-14 FJIC x 7/8-14 MJIC	1
28	K-5806	90 Elbow - 7/8-14 FJIC x 7/8-14 MJIC	5
29	C-4400	90 Male Elbow - 7/8-14 MJIC x 1/2 MNPT	9
30	C24585	90 Male Elbow - 7/8-14 MJIC x 3/4-16 ORB	3
31	N16359	90 Male Elbow - 1 1/16-12 MJIC x 1 1/16-12 ORB	1
32	C-4402	45 Male Elbow - 1/2 MNPT x 7/8-14 MJIC	2
33	C26333	45 Male Elbow - 3/4-16 MORB x 7/8-14 MJIC	1
34	N31096	45 Male Elbow - 1 1/16-12 MJIC x 1 1/16-12 ORB	1
35	N19341	90 Male Elbow - 1 1/16-12 MJIC x 3/4 MNPT	2
36	N16143	90 Male Elbow - 9/16-18 MJIC x 9/16-18 ORB	1
37	N21189	90 Male Elbow - 1 1/16-12 MJIC x 1 1/16-12 FJIC	1
38	C-4394	Male Tee - (3) 7/8-14 MJIC	2
39	H18746	Swivel Tee - (2) 7/8-14 MJIC x 7/8-14 FJIC	3
40	N16388	Male Tee - (2) 1 1/16-12 JIC x (1) 1 1/16-12 ORB	2
41	N19549	Male Tee - (3) 1 1/16-12 JIC	1
42	N34047	Connector - 7/8-14 MJIC x 9/16-18 MORB	4
43	C14840	Connector - 7/8-14 MJIC x 3/4-16 MORB	2
44	C-4399	Connector - 7/8-14 MJIC x 1/2 MNPT	5
45	N40509	Connector - 7/8-14 FJIC x 1/2 MNPT	1
46	N15032	Reducer - 3/4 MNPT x 1/2 FNPT	6
47	N19337	Reducer - 7/8-14 MJIC x 1 1/16-12 FJIC	1
48	N19713	Strap	2
49	N19458	Spacer - 2	4
50	C-4698	Nylon Oil Line Clamp	16
51	N16608	Coupler Clamp - Female Pioneer	6
52	N15098	U-Bolt - 3/8 x 4 x 5	1
53	H21351	U-Bolt - 1/2 x 6 1/16 x 5 1/16 (7180)	2
	N31034	U-Bolt - 1/2 x 8 1/16 x 5 1/16 (7240)	2
54	W-469	Hex Bolt - 1/4 x 3/4 Lg	6
55	F-1767	Hex Bolt - 5/16 x 3/4 Lg	2
56	C-3035	Hex Bolt - 5/16 x 1 3/4 Lg	2
57	S-1303	Hex Bolt - 5/16 x 2 Lg	2
58	S-1302	Hex Bolt - 5/16 x 2 1/2 Lg	3
59	N31314	Hex Bolt - 5/16 x 5 1/2 Lg	2
60	W-479	Hex Bolt - 3/8 x 2 1/4 Lg	2
61	C-3664	Hex Bolt - 3/8 x 5 Lg	2
62	S-1189	Hex Bolt - 1/2 x 1 3/4 Lg	2
63	W-521	Lockwasher - 1/4	8
64	W-522	Lockwasher - 5/16	13
65	W-523	Lockwasher - 3/8	2
66	W-525	Lockwasher - 1/2	6
67	W-538	Flatwasher - 3/8	4
68	W-512	Hex Nut - 1/4	8
69	W-513	Hex Nut - 5/16	13
70	M-3388	Locknut - 3/8 Unitorque	2
71	D-5279	Serrated Locknut - 3/8	2
72	W-514	Hex Nut - 3/8	2
73	W-516	Hex Nut - 1/2	6
74	N16621	Plug - 9/16-18 UNF ORB	1
75	D-4838	Nylon Tie Strap (black) - 14 1/2 Lg	12
76	N29962	Tag - Hose ID - Air Tank - Fan/Auger - PRESSURE	1
77	N29963	Tag - Hose ID - Air Tank - Fan/Auger - RETURN	1
78	N29964	Tag - Hose ID -Air Tank- Fan/Auger - CASE DRAIN	1
79	S29958	Tag - Hose ID - Depth Control - RAISE	2
80	S29959	Tag - Hose ID - Depth Control - LOWER	2
81	S29960	Tag - Hose ID - Wing Lift - FOLD	1
82	S29961	Tag - Hose ID - Wing Lift - UNFOLD	1
83	N34364	Tag - Hose ID - Wheel Marker	4
84	N34052	Mounting Plate - Control Valve	1
85	C26300	Cylinder - 4 x 12 Lg	2
86	N32069	Spacer - Stroke Control 1.375 ID (Aluminum)	2
87	S25999	Spacer - Cylinder Stroke (Aluminum) Not included with cylin	2
88	N29366	Tee - (2) 1 1/16-12 MJIC x (1) 3/4 MNPT	1
89	N29357	Male Plug - 3/4 MNPT	1
90	N19345	Hyd Hose - 1/2 x 132 Lg w/7/8-14 FJIC (7180)	2
	C26343	Hyd Hose - 1/2 x 162 Lg w/7/8-14 FJIC (7240)	2
91	N29359	Connector - 7/8-14 MJIC x 3/4-16 MJIC	6
92	C15318	90 Male Elbow - 7/8-14 MJIC x 7/8-14 ORB	2
93	N29358	Connector - 3/4-16 MJIC x 9/16-18 ORB	6
94	N29319	Hydraulic Motor - DANFOSS	3
	N32517	Seal Kit for N29319	
95	N29320	Valve Manifold Assembly (See pg. 10-15)	1
96	N29362	Hyd Hose - 3/8 x 48 Lg w/3/4-16 FJIC (7180)	2
	N29363	Hyd Hose - 3/8 x 60 Lg w/3/4-16 FJIC (7240)	2
97	N29361	Hyd Hose - 3/8 x 36 Lg w/3/4-16 FJIC	2
98	N29363	Hyd Hose - 3/8 x 60 Lg w/3/4-16 FJIC (7180)	2
	N29364	Hyd Hose - 3/8 x 72 Lg w/3/4-16 FJIC (7240)	2
99	N29365	Male Plug - 9/16-18 ORB	2
100	W-1847	Hex Bolt - 1/4 x 5 Lg	2
101	W-512	Hex Nut - 1/4	2
102	W-521	Lockwasher - 1/4	2
103	N37900	Hyd Hose - 3/4 x 18 Lg w/1 1/16-12 FJIC	1
	N19031	Decal - "Auger/Fan" (Not Shown)	1
	N29354	Decal - "Calibration - Fan" (Not Shown)	1
	N34026	Decal - "Auger/Aux Hyd" (Not Shown)	1
	N34288	Decal - "Fold/Unfold" (Not Shown)	1

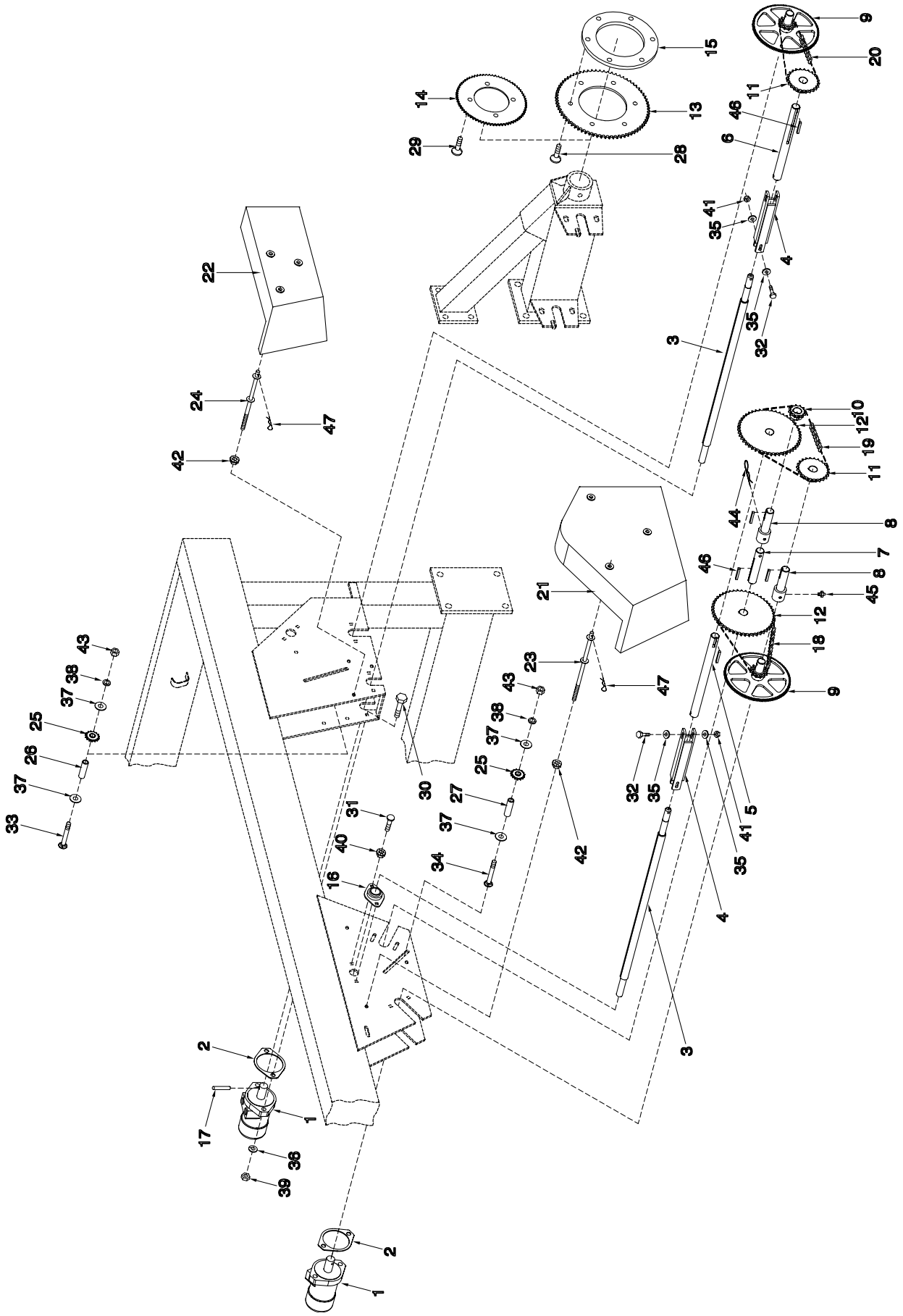
1
2
3
4
5
6
7
8
9
10
11
12
13
14
15
16
17
18
19
20
21
22
23
24
25
26
27
28
29
30
31
32
33
34
35
36
37
38
39
40
41
42
43
44
45
46
47

Variable Rate System - Metering Drive 7180 / 7240 / 7300

Item	Part No.	Description	Qty
1	N29319	Hydraulic Motor - DANFOSS	2
	N32517	Seal Kit for DANFOSS motor	
	N42365	Seal Kit for WHITE RS series motor	
2	N29371	Shim - 12 Ga - Danfoss Motor	2
3	N19687	Meter Shaft - 8 Outlet	2
4	N21288	Coupler - Metering	2
5	N29342	Shaft - Meter End (V-Drive) - Seed	1
6	N29343	Shaft - Meter End (V-Drive) - Fertilizer	1
7	N29341	Shaft - Slow Speed (V-Drive)	1
8	N29340	Shaft - Slow Speed (V-Drive)	2
9	N29345	Shaft - Slow Speed - 12T (V-Drive)	2
10	D17946	Sprocket - 40B12 w/1002 Bore	1
11	N29338	Sprocket - 40B24 w/1002 Bore	2
12	D10747	Sprocket - 40B48 w/1002 Bore	2
13	N29337	Sprocket - 40A72 w/6 Dia Bore 7240 / 7300	1
14	N29336	Sprocket - 35A72 w/4 3/8 Dia Bore 7130 / 7180	1
15	N24779	Spacer Ring - Drive Sprocket 7240 / 7300 ONLY	1
16	N27411	Flangette Bearing - 1001 Bore	7
17	N29375	Drive Pin - 5/16 x 1 1/2 (Groove)	2
18	N29368	Chain - #40 x 73 Link w/Connector & Offset Link	1
19	N29367	Chain - #40 x 76 Link w/Connector	1
20	N29369	Chain - #40 x 53 Link w/Connector & Offset Link	1
21	N29312	Seed Transmission Chain Guard	1
22	N29313	Fertilizer Transmision Chain Guard	1
23	N29317	Chain Guard Pin - 9 7/16 Lg	3
24	N29397	Chain Guard Pin - 7 7/16 Lg	3
25	D-5234	Idler Sprocket	2
26	N19460	Bushing - 2 1/2 Lg	1
27	N29399	Bushing - 3 1/8	1
28	N24780	Countersunk Machine Screw - 1/2-20 UNF x 1 3/4 Lg 7240 / 7300	4
29	N19230	Countersunk Machine Screw - 1/2-20 UNF x 1 Lg 7130 / 7180	4
30	W-488	Hex Bolt - 1/2 x 2 Lg	4
31	D-5259	Carriage Bolt - 5/16 x 3/4	14
32	N22777	Hex Bolt - 1/4 x 2 1/4 Lg - Gr8	4
33	N19283	Carriage Bolt - 3/8 x 3 1/2	1
34	N29398	Carriage Bolt - 3/8 x 4	1
35	S-1198	Flatwasher - 1/4	8
36	W-525	Lockwasher - 1/2	4
37	N19706	Flatwasher - 3/8	4
38	W-523	Lockwasher - 3/8	2
39	W-516	Hex Nut - 1/2	4
40	D-5278	Locknut - 5/16 - Serrated	14
41	N22778	Locknut - 1/4 w/Nylon Insert	4
42	S27987	Locknut - 3/8 - Flange	6
43	W-514	Hex Nut - 3/8	2
44	P1318510	Hair Pin - #19 - 0.243 x 4 3/4 Lg	1
45	S-752	Grease Zerk - 1/2-28 UNF Straight	2
46	S10730	Key - 1/4 x 1 1/4 Square	5
47	N29318	Hair Pin - 0.094 x 2 5/16	6
48	N29355	Decal - Warning (Not Shown)	1
49	N19449	Seal Strip - 3/8 x 1 x 1 inch Long - 3 pieces/shield (bulk/ft) (Not Shown)	6
50	N32799	Decal - DANGER “Guard Missing” (Not Shown)	2

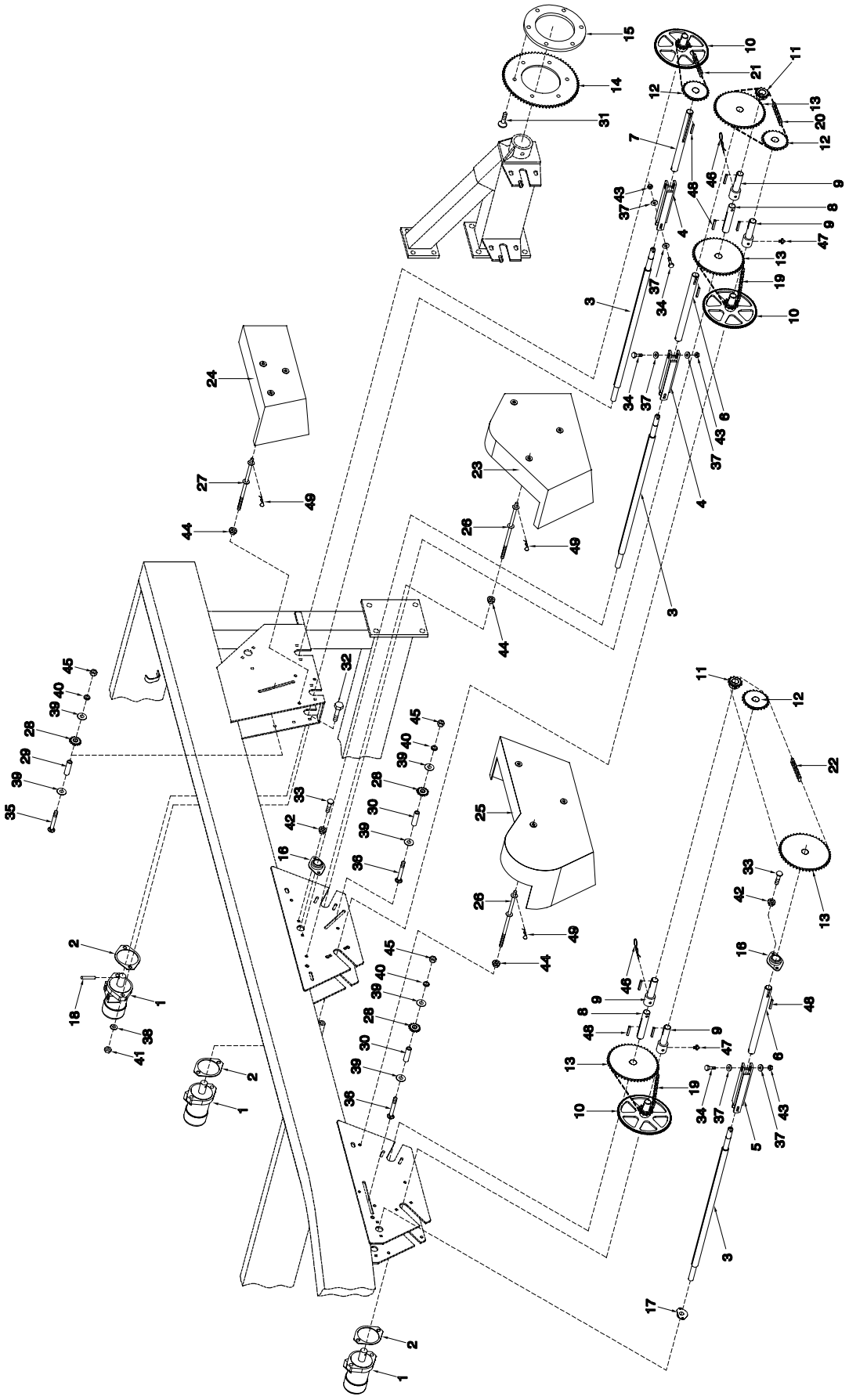

Variable Rate System - Metering Drive 7252

Item	Part No.	Description	Qty
1	N29319	Hydraulic Motor - DANFOSS	3
	N32517	Seal Kit for N29319	
2	N29371	Shim - 12 Ga - Danfoss Motor	3
3	N19687	Meter Shaft - 8 Outlet	3
4	N21288	Coupler - Metering - 7 15/16 Lg	2
5	N19760	Coupler - Metering - 5 15/16 Lg	1
6	N29342	Shaft - Meter End (V-Drive) - Seed	2
7	N29343	Shaft - Meter End (V-Drive) - Fertilizer	1
8	N29341	Shaft - Slow Speed (V-Drive)	2
9	N29340	Shaft - Slow Speed (V-Drive)	4
10	N29345	Shaft - Slow Speed - 12T (V-Drive)	3
11	D17946	Sprocket - 40B12 w/1002 Bore	2
12	N29338	Sprocket - 40B24 w/1002 Bore	3
13	D10747	Sprocket - 40B48 w/1002 Bore	4
14	N29337	Sprocket - 40A72 w/6 Dia Bore	1
15	N24779	Spacer Ring - Drive Sprocket	1
16	N27411	Flangette Bearing - 1.001 Bore	17
17	N31743	Flangette Bearing - 1 Bore - Nipped (SP)	1
18	N29375	Drive Pin - 5/16 x 1 1/2 (Groove)	3
19	N29368	Chain - #40 x 73 Link w/Connector & Offset Link	2
20	N29367	Chain - #40 x 77 Link w/Connector	1
21	N29369	Chain - #40 x 53 Link w/Connector & Offset Link	1
22	N31776	Chain - #40 x 97 Link w/Connector & Offset Link	1
23	N29312	Seed Transmission Chain Guard	1
24	N29313	Fertilizer Transmission Chain Guard	1
25	N29315	Front Transmission Chain Guard	1
26	N29317	Chain Guard Pin - 9 7/16 Lg	6
27	N29397	Chain Guard Pin - 7 7/16 Lg	3
28	D-5234	Idler Sprocket	3
29	N19460	Bushing - 2 1/2 Lg	1
30	N29399	Bushing - 3 1/8	2
31	N24780	Countersunk Machine Screw - 1/2-20 UNF x 1 3/4 Lg	4
32	W-488	Hex Bolt - 1/2 x 2 Lg	6
33	D-5259	Carriage Bolt - 5/16 x 3/4	24
34	N22777	Hex Bolt - 1/4 x 2 1/4 Lg - GR8	6
35	N19283	Carriage Bolt - 3/8 x 3 1/2	1
36	N29398	Carriage Bolt - 3/8 x 4	2
37	S-1198	Flatwasher - 1/4	12
38	W-525	Lockwasher - 1/2	6
39	N19706	Flatwasher - 3/8	6
40	W-523	Lockwasher - 3/8	3
41	W-516	Hex Nut - 1/2	6
42	D-5278	Locknut - 5/16 - Serrated	24
43	N22778	Locknut - 1/4 w/Nylon Insert	6
44	S27987	Locknut - 3/8 - Flange	9
45	W-514	Hex Nut - 3/8	3
46	P1318510	Hair Pin - #19 - 0.243 x 4 3/4 Lg	2
47	S-752	Grease Zerk - 1/2-28 UNF Straight	4
48	S10730	Key - 1/4 x 1 1/4 Square	9
49	N29318	Hair Pin - 0.094 x 2 5/16	9
50	N29355	Decal - Warning (Not Shown)	1
51	N19449	Seal Strip - 3/8 x 1 x 1 inch Long - 3 pieces/shield (bulk/ft) (Not Shown)	9
52	N32799	Decal - DANGER “Guard Missing” (Not Shown)	3

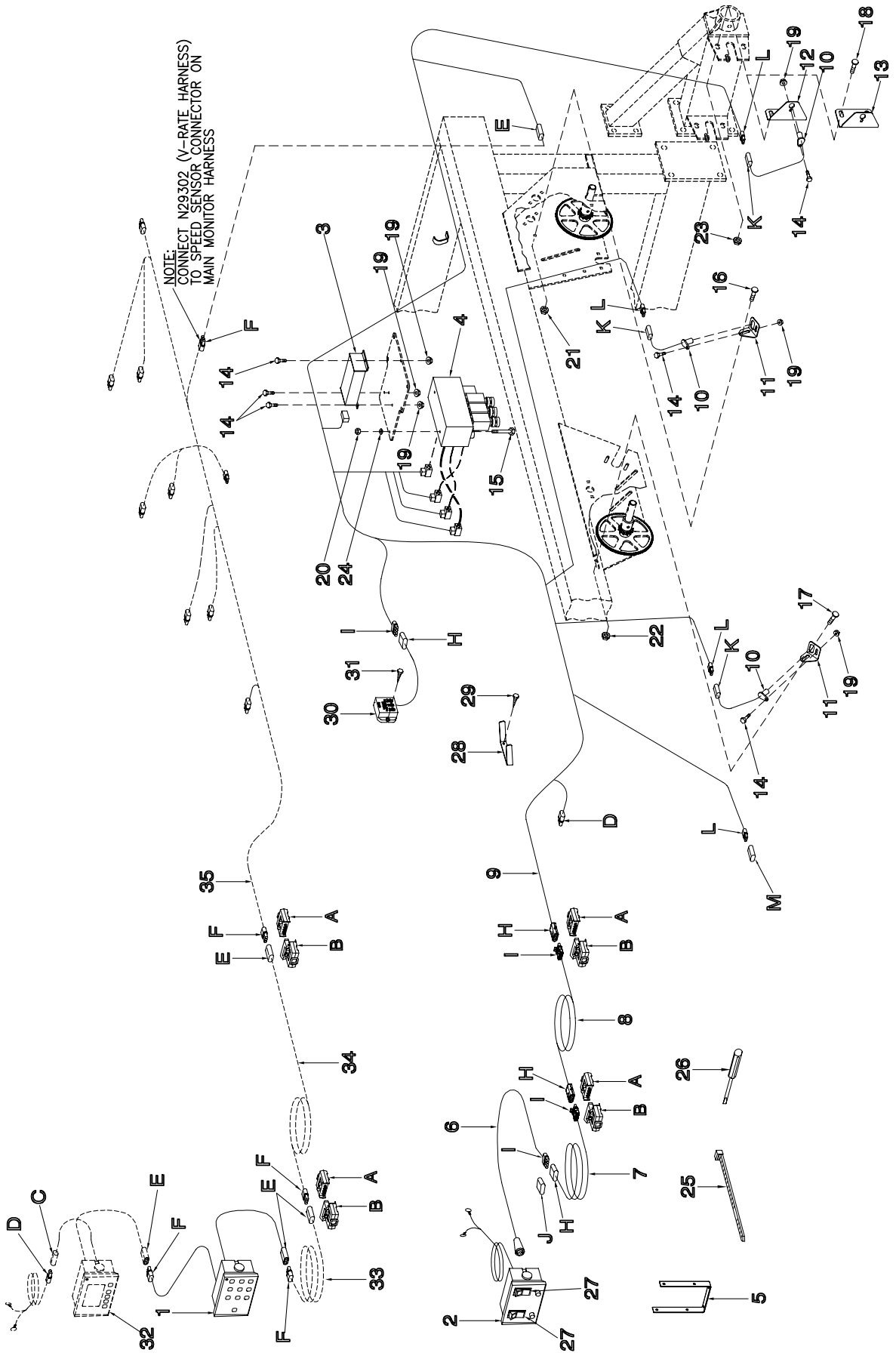
NOTE:
CONNECT N29302 (V-RATE HARNESS)
TO SPEED SENSOR CONNECTOR ON
MAIN MONITOR HARNESS

Variable Rate System - Control System

Item	Part No.	Description	Qty
1	N29300	Console - Master Switch (V/Rate)	1
2	N29305	Controller Switch - (V/Rate)	1
3	N29301	Controller Housing (V/Rate)	1
4	N29320	Valve Manifold Assembly	1
5	N29370	Bracket - Mount - Variable Console	1
6	N29306	Wire - V/Rate Extension - Lead - 8 1/2 ft	1
7	N32464	Wire - V/Rate Extension - Main - 21 ft - Weather Pak	1
	N29304	Wire - V/Rate Extension - Main - 21 ft - Brylite	1
8	N32465	Wire - V/Rate Extension - 37 1/2 ft Tow Behind ONLY - Weather Pak	1
	N29303	Wire - V/Rate Extension - 37 1/2 ft Tow Behind ONLY - Brylite	1
9	N32478	Harness - V-Rate Controller - Weather Pak	1
	N29332	Harness - V-Rate Controller - Brylite	1
10	N29307	Hall Effect Sensor	2
11	N29296	Bracket - Sensor - Metershaft	2
12	N29309	Bracket - Sensor - Main 7130 / 7180	1
13	N37330	Bracket - Sensor - Main 7240 / 7252 / 7300	1
14	W-469	Hex Bolt - 1/4 x 3/4	6
15	W-1847	Hex Bolt - 1/4 x 5 Lg	2
16	D-5259	Carriage Bolt - 5/16 x 3/4 Lg	1
17	D-5260	Carriage Bolt - 3/8 x 1 1/4 Lg	1
18	D-5265	Carriage Bolt - 1/2 x 1 Lg	2
19	D-5277	Locknut - 1/4 - Serrated	6
20	W-512	Hex Nut - 1/4	2
21	D-5278	Locknut - 5/16 - Serrated	1
22	D-5279	Locknut - 3/8 - Serrated	1
23	D14565	Locknut - 1/2 - Serrated	2
24	W-521	Lockwasher - 1/4	2
25	D-4838	Nylon Tie Strap - Black - 14 1/2 Lg	3
26	N27625	Assembly Tool - Packard Connector	1
27	N29382	Rocker Switch - 2 Way - #83301	2
28	N29400	Bracket - Auxiliary Mount - Monitor	1
29	N16698	Screw - Self Tapping - 1/4	2
30	N29333	Control - Start/Stop	1
31	N29696	Screw - Self Tapping - #10 x 3/4	2
		The following Items come with the basic Air Seeder	
32	N27010	Monitor - Version 1	
	N37010	Monitor - Version 2	
33	N32470	Wire - Monitor Extension - 21 ft - Weather Pak	
	N27608	Wire - Monitor Extension - 21 ft - Brylite	
34	N32471	Wire - Monitor Extension - 37 1/2 ft Tow Behind ONLY - Weather Pak	
	N28199	Wire - Monitor Extension - 37 1/2 ft Tow Behind ONLY - Brylite	
35	N32472	Harness - Monitor (Weather Pak) 7130 / 7180 Tow Behind	
	N27006	Harness - Monitor (Brylite) 7130 / 7180 Tow Behind	
	N32474	Harness - Monitor (Weather Pak) 7240 / 7300 Tow Behind	
	N27008	Harness - Monitor (Brylite) 7240 / 7300 Tow Behind	
	N32473	Harness - Monitor (Weather Pak) 7180 Tow Between	
	N27007	Harness - Monitor (Brylite) 180 Tow Between	
	N32475	Harness - Monitor (Weather Pak) 7240 Tow Between	
	N27009	Harness - Monitor (Brylite) 7240 Tow Between	
	N32476	Harness - Monitor (Weather Pak) 7252 Tow Behind	
	N31550	Harness - Monitor (Brylite) 7252 Tow Behind	
	N32477	Harness - Monitor (Weather Pak) 7252 Tow Between	
	N31551	Harness - Monitor (Brylite) 7252 Tow Between	
		See Pg. 8-3 for complete list of Replacement Connectors	
A	N21538	Brylite Connector - 4 Pin Male	
B	N21539	Brylite Connector - 4 Pin Female	
C	N29384	Packard Connector - BLACK - 2 Pin Plug	
D	N29385	Packard Connector - BLACK - 2 Pin Socket	
E	N27613	Packard Connector - BLACK - 3 Pin Plug	
F	N27614	Packard Connector - BLACK - 3 Pin Socket	
H	N29151	Packard Connector - BLACK - 4 Pin Plug	
I	N29152	Packard Connector - BLACK - 4 Pin Socket	
J	N29153	Seal Connector - Black - BLACK - 4 Pin	
K	N28901	Packard Connector - BLUE - 3 Pin Plug	
L	N28902	Packard Connector - BLUE - 3 Pin Socket	
M	N29143	Seal Connector - BLUE - 3 Pin	

Variable Rate System
Valve Manifold

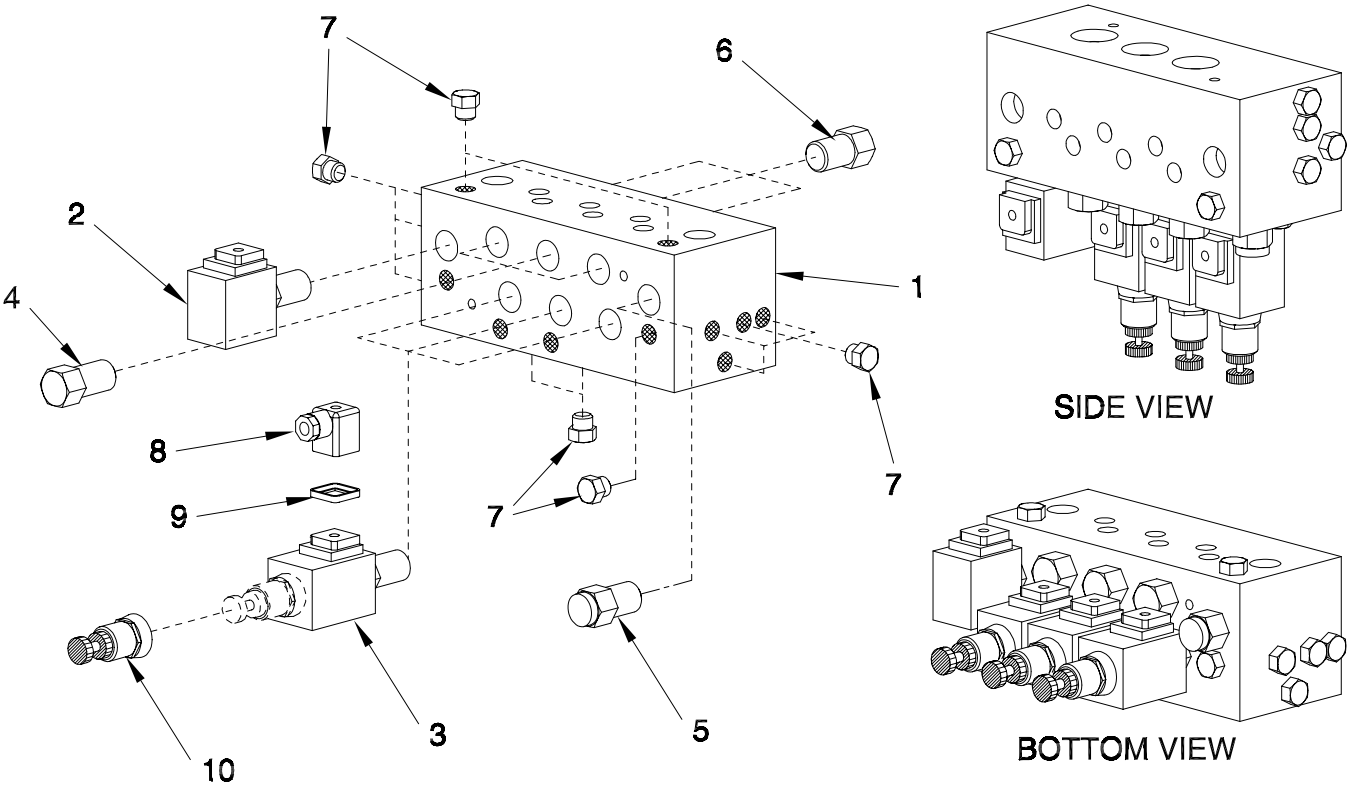

Item	Part No.	Description	Qty
1	N29321	Valve Manifold Block	1
2	N29322	Valve - Dump - Solenoid	1
3	N29323	Valve - Solenoid - Flow Element	3
4	N29324	Valve - Flow Restrictor - Slave	3
5	N29325	Valve - Flow Regulator - Supply	1
6	N29328	Valve - Flow Regulator - Drain	3
7	N29365	Male Plug - 9/16-18 ORB	15
8	N29329	DIN Connector - Plug w/Gasket	4
9	N29331	Gasket - DIN Connector	4
10	N29330	Adjustment Knob Assembly	3
	N38962	Nut for N29330	
	N38963	Screw for N29330	
	N29320	Valve Manifold Assembly (Includes above items except 8, 9 & 10)	

Section 10: Options

Section Contents

Rear Tow Hitch 10-2
Rear Tow Hitch - Long 10-3
Hyd Extension Kit for Rear Tow Hitch 10-4
Hitch Extension Kit for Tow Between Cart 10-5
Three Point Hitch 10-6
Three Point Hitch Air Cart Hydraulics w/Std Auger 10-8
Three Point Hitch Hydraulics for Xpress (Prior to November 2004) 10-10
Three Point Hitch Distribution 10-12
Three Point Hitch Lift Cylinder 10-14

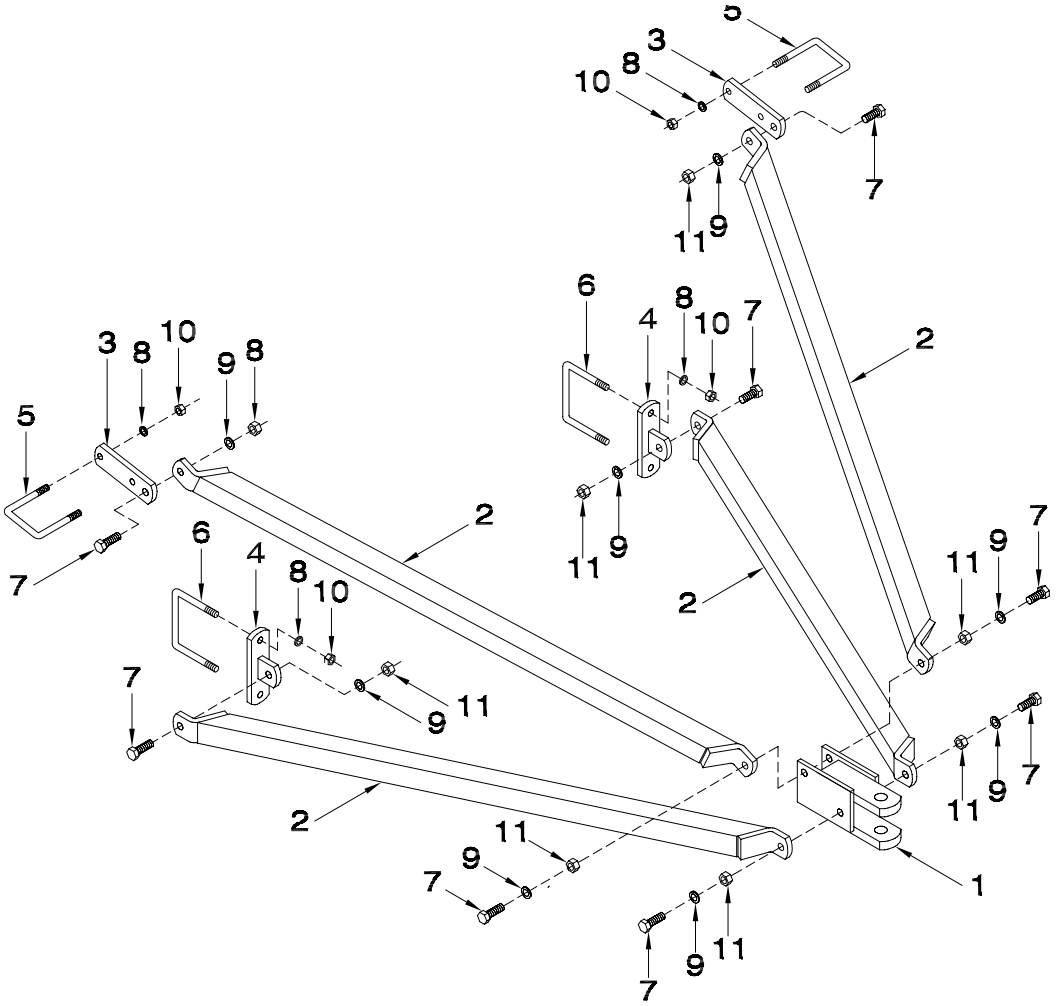

Item	Part No.	Description	Qty
1	N27580	Tongue - Packer Hitch	1
2	N27583	Tube- Packer Hitch	4
3	N27579	Hitch Bracket - Top	2
4	N27586	Hitch Bracket - Bottom	2
5	C-219	U-Bolt - 5/8 x 4 x 5 9/16 Lg	2
6	F-4642	U-Bolt - 5/8 x 6 x 5 1/2 Lg	2
7	W-1553	Hex Bolt - 3/4 x 2 1/4 Lg	8
8	W-526	Lockwasher - 5/8	8
9	W-527	Lockwasher - 3/4	8
10	W-517	Hex Nut - 5/8	8
11	W-518	Hex Nut - 3/4	8
	H27840	Kit - Packer Hitch - 7000 BHND (Includes all above items) (ORDER THROUGH WHOLEGOODS)	

Options
Rear Tow Hitch - Long

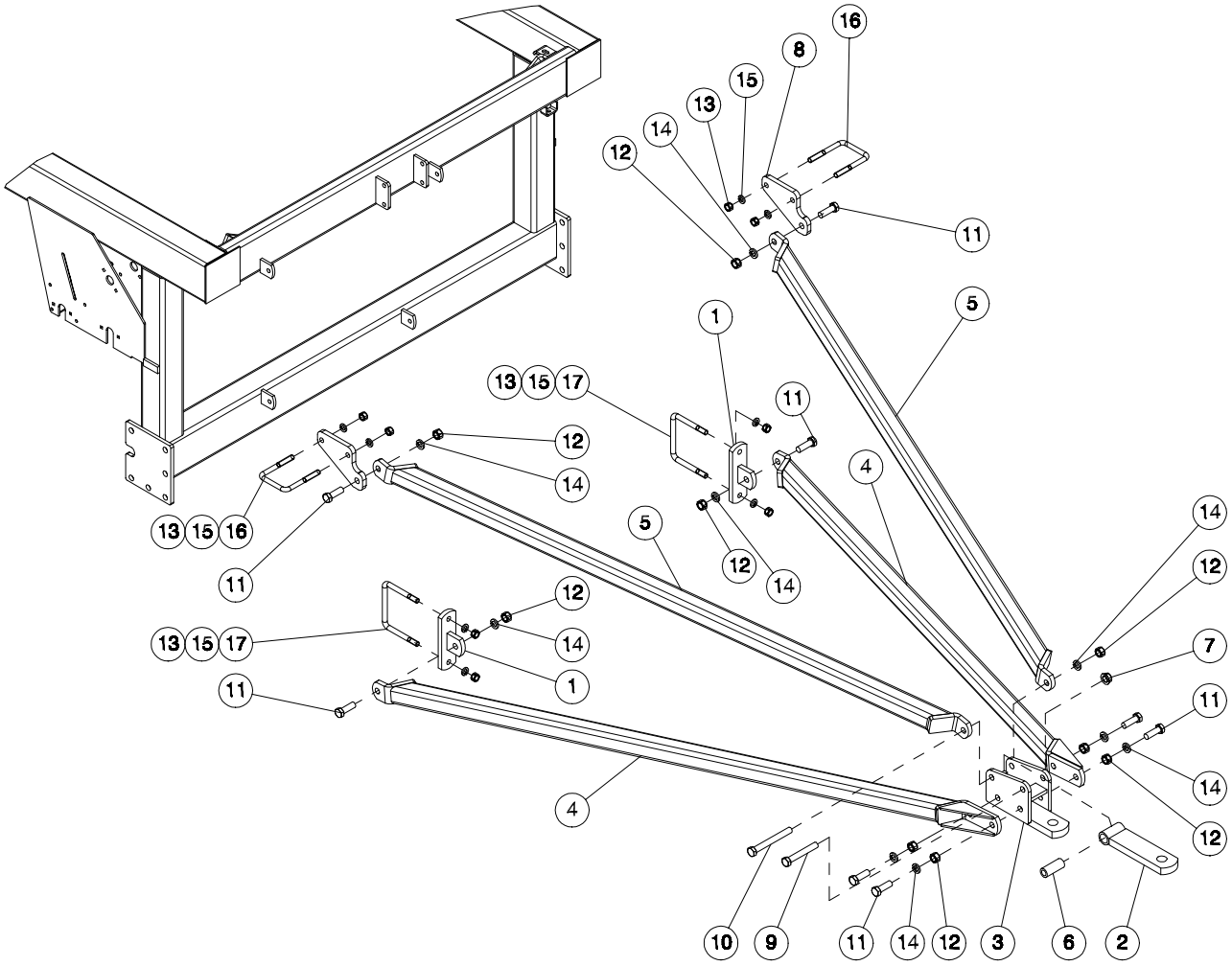

Item	Part No.	Description	Qty
1	N27586	Hitch Bracket - Bottom	2
2	N34298	Hammer Strap	1
3	N34299	Hitch Tongue	1
4	N34396	Bottom Brace - Tow Hitch	2
5	N34398	Top Brace - Tow Hitch	2
6	N34354	Bushing	1
7	D12942	Flange Lock Nut - 3/4 Serrated	1
8	N34456	Top Hitch Bracket	2
9	S-1191	Hex Bolt - 3/4 x 5 Lg	1
10	C-3525	Hex Bolt - 3/4 x 6-1/2 Lg	1
11	W-1553	Hex Bolt - 3/4 x 2 1/4 Lg	8
12	W-518	Hex Nut - 3/4	9
13	W-517	Hex Nut - 5/8	8
14	W-527	Lockwasher - 3/4	9
15	W-526	Lockwasher - 5/8	8
16	C-219	U-Bolt - 5/8 x 4 x 5 9/16	2
17	F-4642	U-Bolt - 5/8 x 6 x 5 1/2	2
	N34399	Kit - NH3 Tank Tow Hitch - 7000 BHND (Includes all above items) (ORDER THROUGH WHOLEGOODS)	

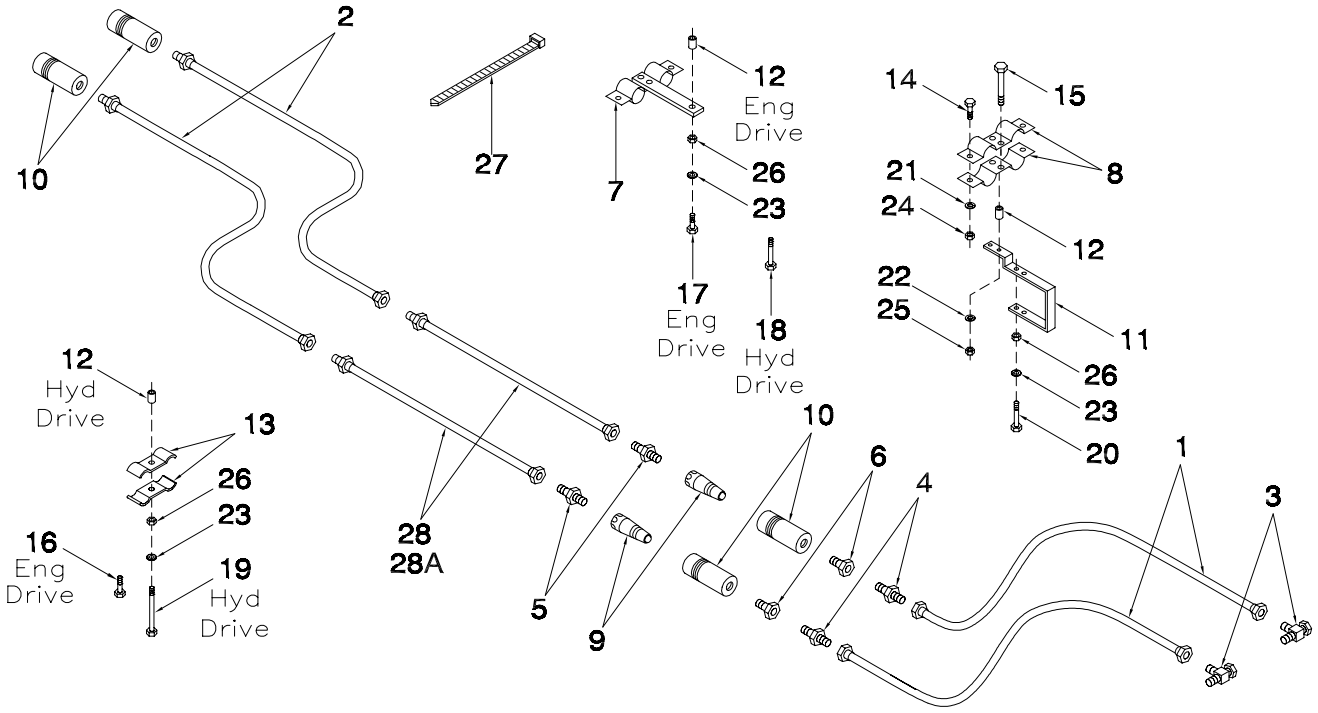

Item	Part No.	Description	Qty
1	H18267	Hyd Hose - 1/4 x 96 Lg w/9/16-18 FJIC	2
2	N15041	Hyd Hose - 1/2 x 293 Lg w/7/8-14 FJIC x 1/2 MNPT	2
3	C-4403	Tee - (2) 9/16-18 MJIC x (1) 9/16-18 FJIC	2
4	C-4405	Connector - 9/16-18 MJIC x 3/8 MNPT	2
5	C-4399	Connector - 7/8-14 MJIC x 1/2 MNPT	2
6	C-719	Reducer - 1/2 MNPT x 3/8 FNPT	2
7	S-1379	Pioneer Coupler Assembly	1
8	N16608	Pioneer Clamp	2
9	C-817	Male Pioneer Tip - 1/2 FNPT	2
10	C-818	Pioneer Coupler - 1/2 FNPT	4
11	N21691	Mounting Bracket	1
12	N16257	Spacer	3
13	D-4808	Oil Line Clamp	2
14	W-469	Hex Bolt - 1/4 x 3/4	2
15	W-473	Hex Bolt - 5/16 x 1 1/2	2
16	W-187	Hex Bolt - 3/8 x 1 1/4	1
17	W-619	Hex Bolt - 3/8 x 1 3/4	1
18	D-5249	Hex Bolt - 3/8 x 3 1/4	1
19	S-1299	Hex Bolt - 3/8 x 4 1/2	1
20	C-3918	Hex Bolt - 3/8 x 5	1
21	W-521	Lockwasher - 1/4	2
22	W-522	Lockwasher - 5/16	2
23	W-523	Lockwasher - 3/8	3
24	W-512	Hex Nut - 1/4	2
25	W-513	Hex Nut - 5/16	2
26	W-514	Hex Nut - 3/8	3
27	D-4838	Tie Strap	6
28	C-4385	Hyd Hose - 1/2 x 24 Lg w/7/8-14 MJIC x 7/8-14 FJIC 7130 /7180	2
28A	C15310	Hyd Hose - 1/2 x 72 Lg w/7/8-14 MJIC x 7/8-14 FJIC 7240 / 7252 / 7300	2
	H27842	Kit - Hydraulic Extension - 7130 / 7180 (Includes All Items Except #28A)	
	H25645	Kit - Hydraulic Extension - 7240 / 7252 / 7300 (Includes All Items Except #28) (ORDER THROUGH WHOLEGOODS)	

Options
Hitch Extension Kit for Tow Between Cart

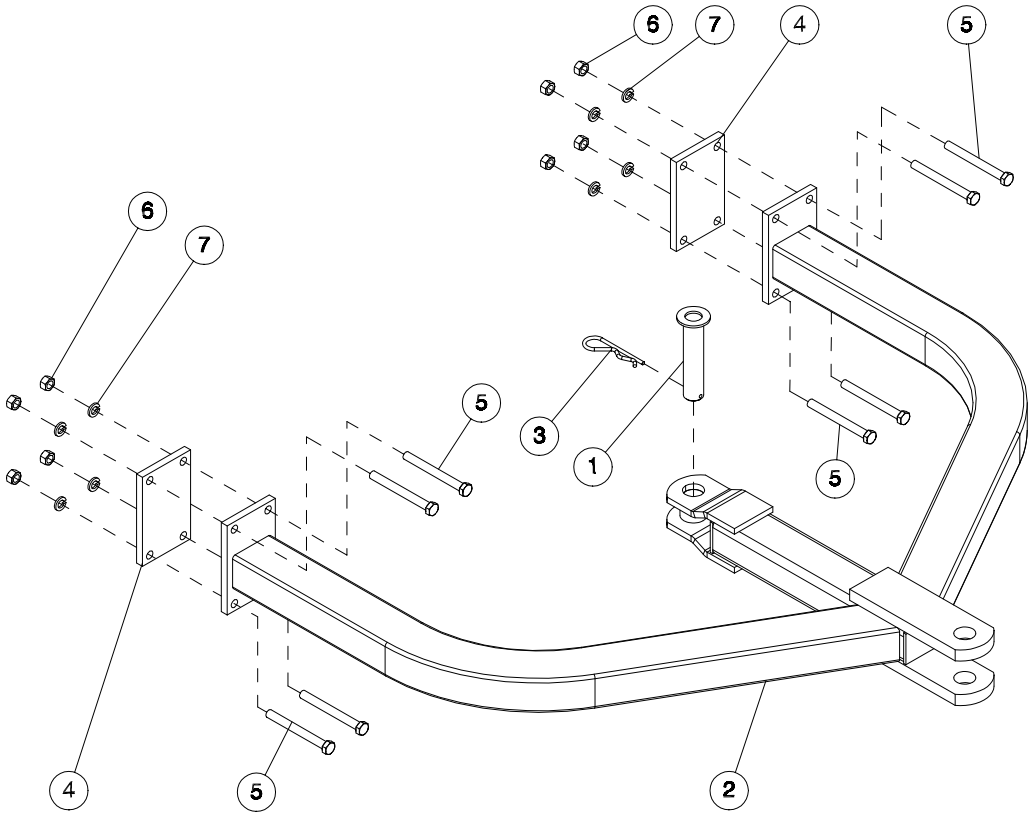

Item	Part No.	Description	Qty
1	N15049	Pin - 1 1/2 Dia x 6 1/2 UL	1
2	N36195	Extended Hitch	1
3	P1318510	Hairpin - #19 - 1/4 x 4 3/8	1
4	N36191	Plate	2
5	C-507	Hex Bolt - 5/8 x 6 Lg	8
6	W-517	Hex Nut - 5/8	8
7	W-526	Lockwasher - 5/8	8

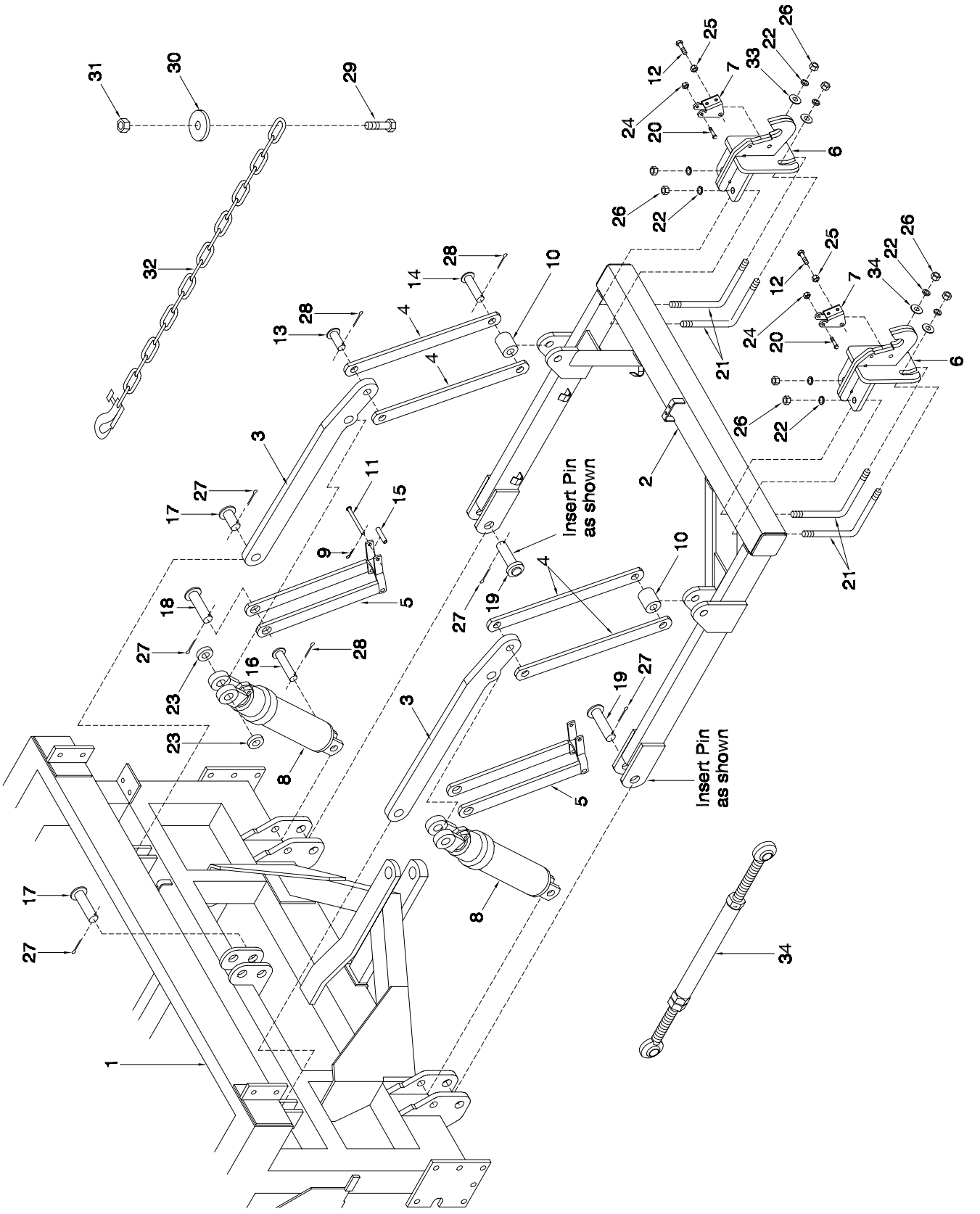
Insert Pin as shown
Insert Pin as shown

Options - Three Point Hitch

Item	Part No.	Description	Qty
1	N28370	Frame - 7180 Tow Between/Three Point Hitch	1
	N28375	Frame - 7240 Tow Between/Three Point Hitch	1
2	N28960	Three Point Hitch Frame	1
3	N28954	Lever Arm	2
4	N28962	Lift Arm	4
5	N28390	Transport Lock	2
6	N34550	Lower Link	2
7	N28966	Rocker Plate	2
8	C26300	Cylinder - 4 x 12 Lg (See Page 10-14)	2
9	D17315	Hairpin - #3 - 0.094 x 1 21/32 Lg	2
10	N34361	Bushing	2
11	N28953	Pin - 3/8 x 4 1/4 UL	2
12	W-489	Hex Bolt - 1/2 x 2 1/4 Lg	2
13	W-558	Pin - 1 x 2 1/4 UL	2
14	C-1429	Pin - 1 x 3 3/8 UL	2
15	N31313	Sleeve - Transport Lock Pin	2
16	F-3645	Pin - 1 x 5 1/4 UL	2
17	N28997	Pin - 1 1/4 x 2 1/4 UL	2
18	N28994	Pin - 1 1/4 x 4 1/4 UL	2
19	N32735	Pin - 1 1/4 x 5 1/4 UL	2
20	W-479	Hex Bolt - 3/8 x 2 1/4 Lg	2
21	N34554	L-Bolt - 3/4 x 4 x 4 LL	4
22	W-527	Lockwasher - 3/4	8
23	N13962	Washer - 2 1/2 OD x 1.281 ID x 1/4	4
24	M-3388	Locknut - 3/8 Unitorque	2
25	F-3405	Lock Nut - 1/2	2
26	W-518	Hex Nut - 3/4	8
27	D-5239	Cotter Pin - 1/4 x 2 1/4 Lg	6
28	W-535	Cotter Pin - 1/4 x 1 1/2 Lg	6
29	C12609	Hex Bolt - 1 x 4 1/2 Lg	1
30	N19605	Washer	1
31	T-5276	Lock Nut	1
32	C18761	Chain - Safety - 3/8 P-7 AG - 30,000 lb	1
33	W-541	Washer - 2 OD x 0.813 ID x 10GA	2
34	N28971	Turnbuckle	1

Note: Turnbuckle is not supplied with Xpress three point hitch assembly.

Options
Three Point Hitch Air Cart Hydraulics w/Std Auger

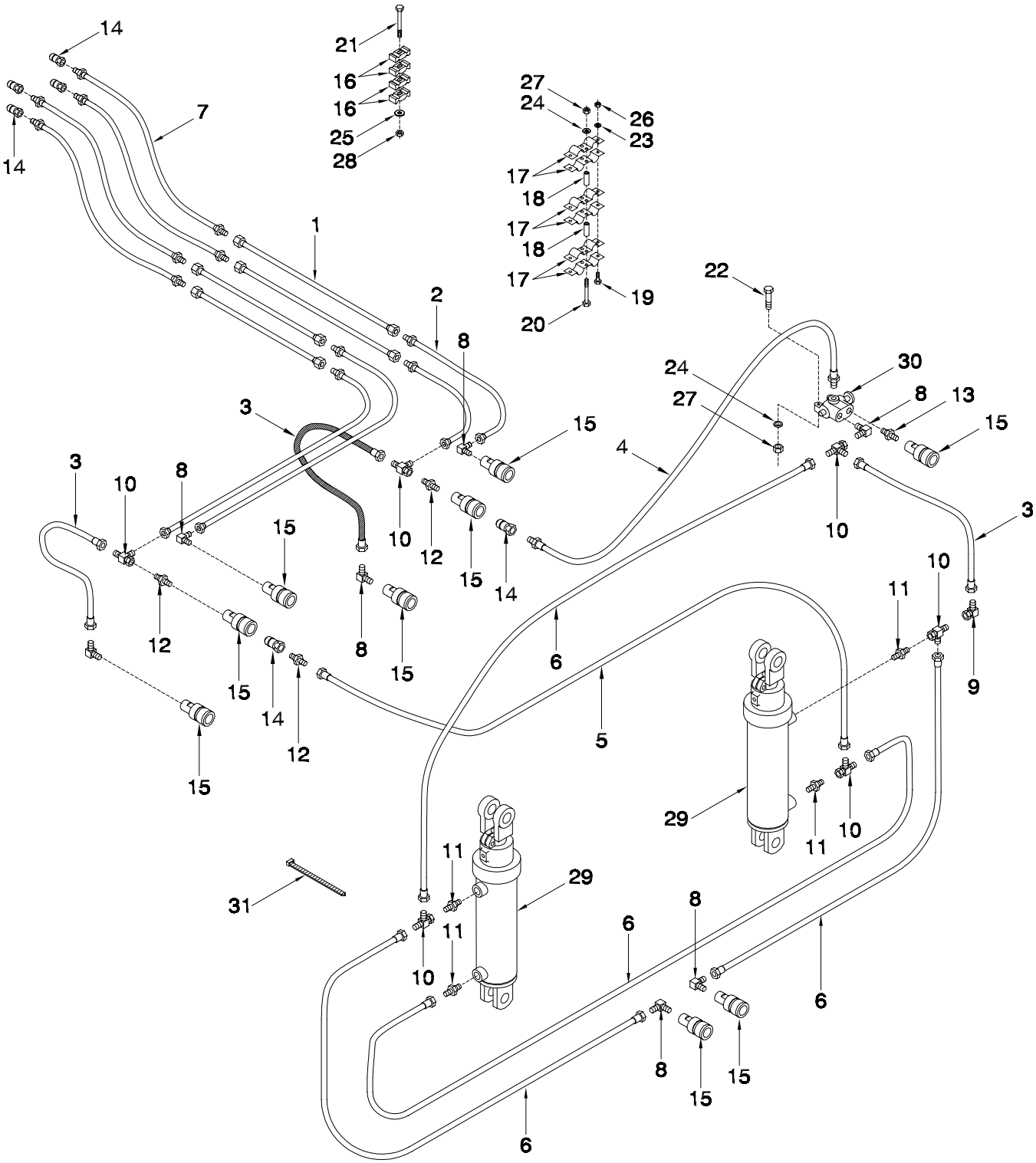

Options - Three Point Hitch Air Cart Hydraulics w/Std Auger

Item	Part No.	Description	Qty
1	C-4367	Oil Line - 5/8 x 80 Lg	4
	C-4369	Oil Line - 5/8 x 96 Lg	4
2	C-4385	Hyd Hose - 1/2 x 24 Lg w/7/8-14 MJIC x 7/8-14 FJIC	4
3	C-4468	Hyd Hose - 1/2 x 24 Lg w/7/8-14 FJIC x 7/8-14 FJIC	3
4	C-1482	Hyd Hose - 1/2 x 32 Lg w/1/2 MNPT	1
5	C-4404	Hyd Hose - 1/2 x 36 Lg w/7/8-14 FJIC x 7/8-14 FJIC	1
6	C18779	Hyd Hose - 1/2 x 72 Lg w/7/8-14 FJIC x 7/8-14 FJIC	4
7	N19548	Hyd Hose - 1/2 x 132 Lg w/7/8-14 MJIC x 1/2 MNPT	4
8	C-4400	90 Elbow - 7/8-14 MJIC x 1/2 MNPT	7
9	K-5806	90 Swivel Elbow - 7/8 MJIC x 7/8 FJIC	1
10	H18746	Swivel Tee - 2 x 7/8-14 MJIC x 7/8-14 FJIC	6
11	C14840	Male Connector - 1/2 Morb x 5/8 MJIC	4
12	C-4399	Male Connector - 7/8-14 MJIC & 1/2 MNPT	3
13	K21212	NPT Male Union	1
14	C-817	Male Pioneer Tip - 1/2 FNPT	6
15	C-818	Pioneer Coupler - 1/2 FNPT	9
16	C-4698	Nylon Oil Line Clamp	8
17	N16608	Coupler Clamp - Female Pioneer	6
18	N19458	Spacer - 2	4
19	W-469	Hex Bolt - 1/4 x 3/4 Lg	6
20	N31314	Hex Bolt - 5/16 x 5 1/2 Lg	2
21	C-1550	Hex Bolt - 3/8 x 4 Lg	2
22	W-474	Hex Bolt - 5/16 x 1 7/8 Lg	2
23	W-521	Lockwasher - 1/4	6
24	W-522	Lockwasher - 5/16	4
25	W-538	Flatwasher - 3/8	2
26	W-512	Hex Nut - 1/4	6
27	W-513	Hex Nut - 5/16	4
28	M-3388	Locknut - 3/8 Unitorque	2
29	C26300	Cylinder - 4 x 12 Lg	2
30	S-4730	Selector Valve - 2 Way (Seal Kit - N31601)	1
31	D-4838	Nylon Tie Strap - 14 1/2 Lg	8

Three Point Hitch Air Cart Hydraulics w/Front Mount Auger - See Page 5-16

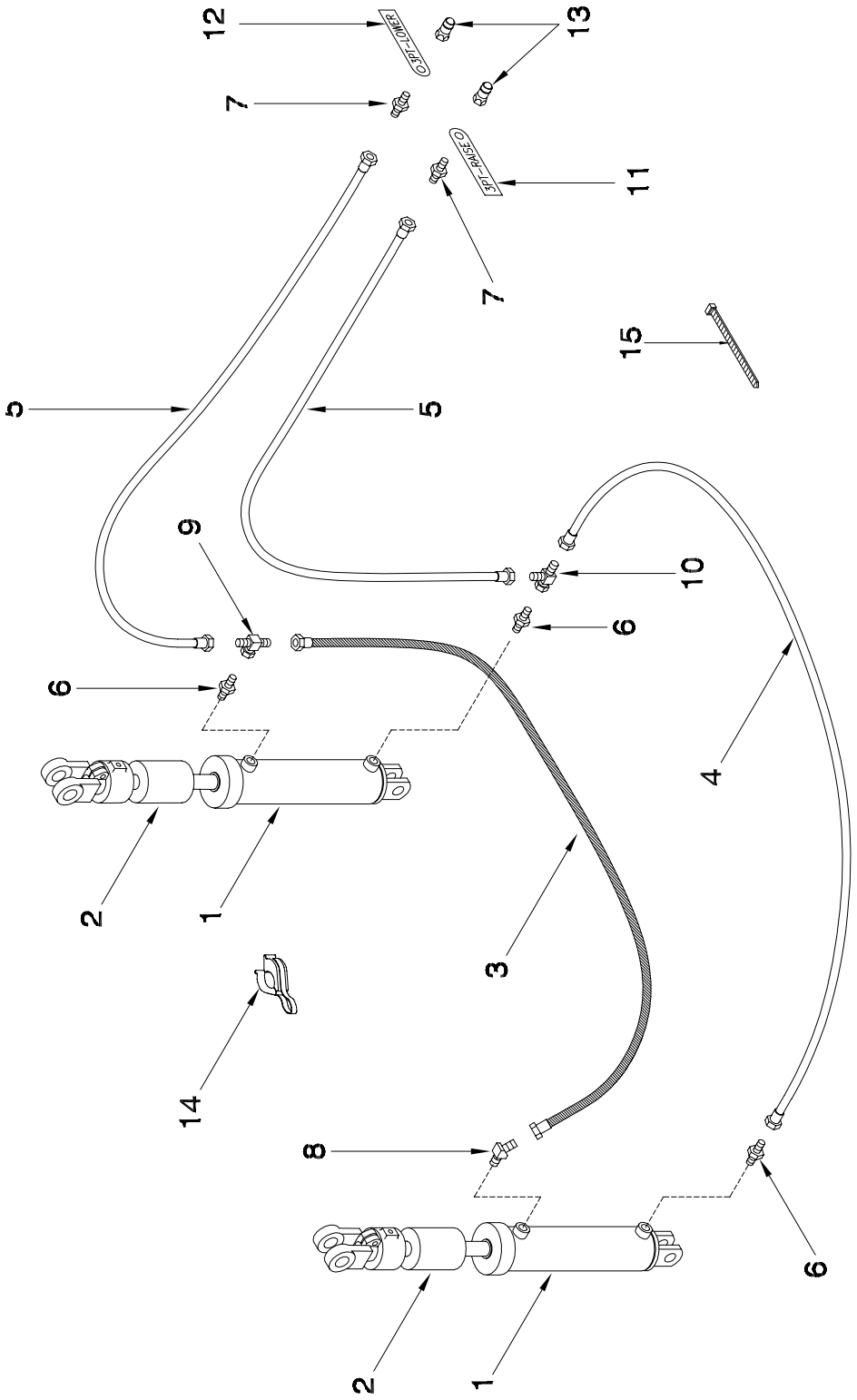
12
13
7
11
7
15
5
5
9
10
6
6
4
2
1
3
14
8
6
2
1

Options - Three Point Hitch Hydraulics for Xpress

Item	Part No.	Description	Qty
1	C26300	Cylinder - 4 x 12 Lg	2
2	N32069	Spacer - Stroke Control 1.375 ID (Aluminum)	2
3	H-4408	Hyd Hose - 1/2 x 84 Lg w/7/8-14 FJIC x 7/8-14 FJIC	1
4	C18779	Hyd Hose - 1/2 x 72 Lg w/7/8-14 FJIC x 7/8-14 FJIC	1
5	K-5685	Hyd Hose - 1/2 x 48 Lg w/7/8-14 FJIC x 7/8-14 FJIC	2
6	C14840	Male Connector - 1/2 ORB x 5/8 MJIC	3
7	C-4399	Male Connector - 7/8-14 MJIC & 1/2 MNPT	2
8	C26333	45 Male Elbow - 7/8-14 MJIC x 3/4-16 ORB	1
9	F24559	Swivel Tee - 7/8-14 FJIC x (2) 7/8-14 MJIC	1
10	H18746	Swivel Tee - (2) 7/8-14 MJIC x 7/8-14 FJIC	1
11	N34362	Tag - Hose ID - Three Point Hitch - RAISE	1
12	N34363	Tag - Hose ID - Three Point Hitch - LOWER	1
13	C-817	Male Pioneer Tip - 1/2 FNPT	2
14	S25999	Spacer - Cylinder Stroke (Aluminum) Not included with cylinder	2
15	D-4838	Tie Strap	4

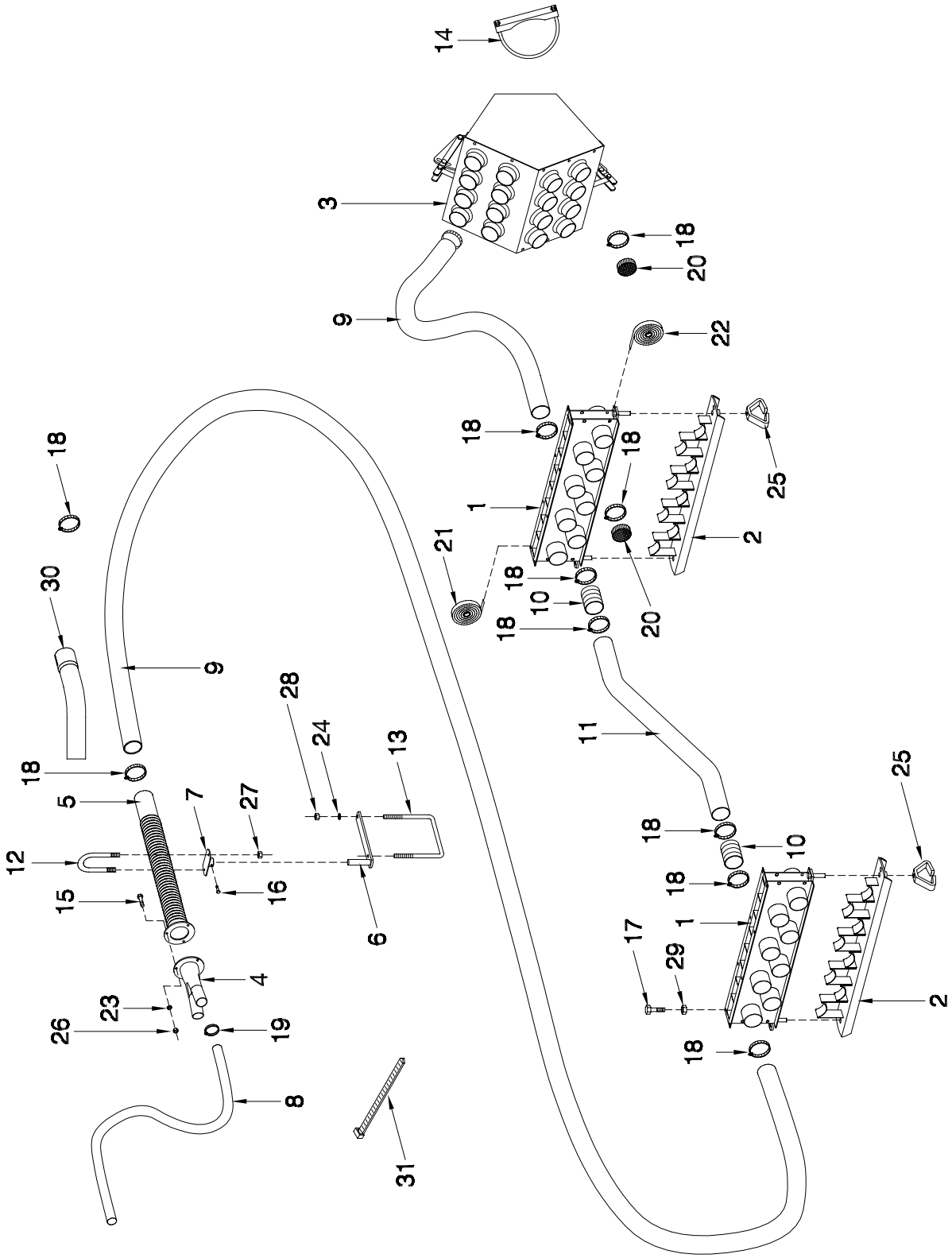
14
3
18
20
9
22
18
18
25
1
2
21
18
10
18
20
30
9
28
24
13
11
18
5
7
27
25
12
18
10
15
16
18
6
1
17
29
4
2
23
26
19
18
8
31

Options - Three Point Hitch Distribution

Item	Part No.	Description	No: Used 8 Row	No: Used 12 Row
1	N19690	Collector - 8 Outlet	2	2
2	N19693	Cover - Cleanout - 8 Outlet	2	2
3	N28824	Plenum Assy - Dual Shoot	1	1
4	N29130	Splitter	4	6
5	N15135	Pipe - Corr Dif - Divider Head	4	6
6	N31208	Distribution Support	8	12
7	N15102	Support - Rear	8	12
8	R480056	Hose - 1 1/2 ID (Bulk/ft)	25 ft	50 ft
9	R480055	Hose - 2 1/2 ID (Bulk/ft)	25 ft	75 ft
10	N19428	Hose - 0.254 ID x 0.279 OD x 5 Lg	8	12
11	N27045	Tube - Primary - 43 3/4 - 7180	0	6
	N27050	Tube - Primary - 55 3/4 - 7240/7300	4	0
12	N15096	U-Bolt - 1/4 Dia x 2 1/2 - Short	8	12
13	N31209	U-Bolt - 3/8 x 7 1/16 x 8	8	12
14	N15930	U-Clamp - 6 Heavy Duty Flat	1	1
15	W-469	Hex Bolt -1/4 x 3/4 Lg	12	18
16	N24396	Set Screw - 1/4 x 3/8 Lg	8	12
17	F-1767	Hex Bolt -5/16 x 3/4 Lg	16	16
18	N11905	Hose Clamp - 2 1/2 Dia - 7180	64	72
	N11905	Hose Clamp - 2 1/2 Dia - 7240	66	76
19	N11906	Hose Clamp - 1 1/2 Dia	8	12
20	N11907	Plastic Cap - Short - 2 1/2 Dia - 7180	28	18
	N11907	Plastic Cap - Short - 2 1/2 Dia - 7240	30	22
21	N15716	Seal - 1/4 x 1 (Bulk/ft)	10 ft	10 ft
22	N19449	Seal - 3/8 x 1 (Bulk/ft)	10 ft	10 ft
23	W-521	Lockwasher - 1/4	12	18
24	W-523	Lockwasher - 3/8	16	24
25	N27360	Wing Nut - 1/2	4	4
26	W-512	Hex Nut - 1/4	12	18
27	D-5277	Serrated Lock Nut - 1/4	16	24
28	W-514	Hex Nut - 3/8	16	24
29	D-5278	Serrated Lock Nut - 5/16	16	16
30	N27329	Tube - Primary - 45 degree Elbow	2	2
31	D-4838	Nylon Tie Strap - 14.5 Lg	0	2

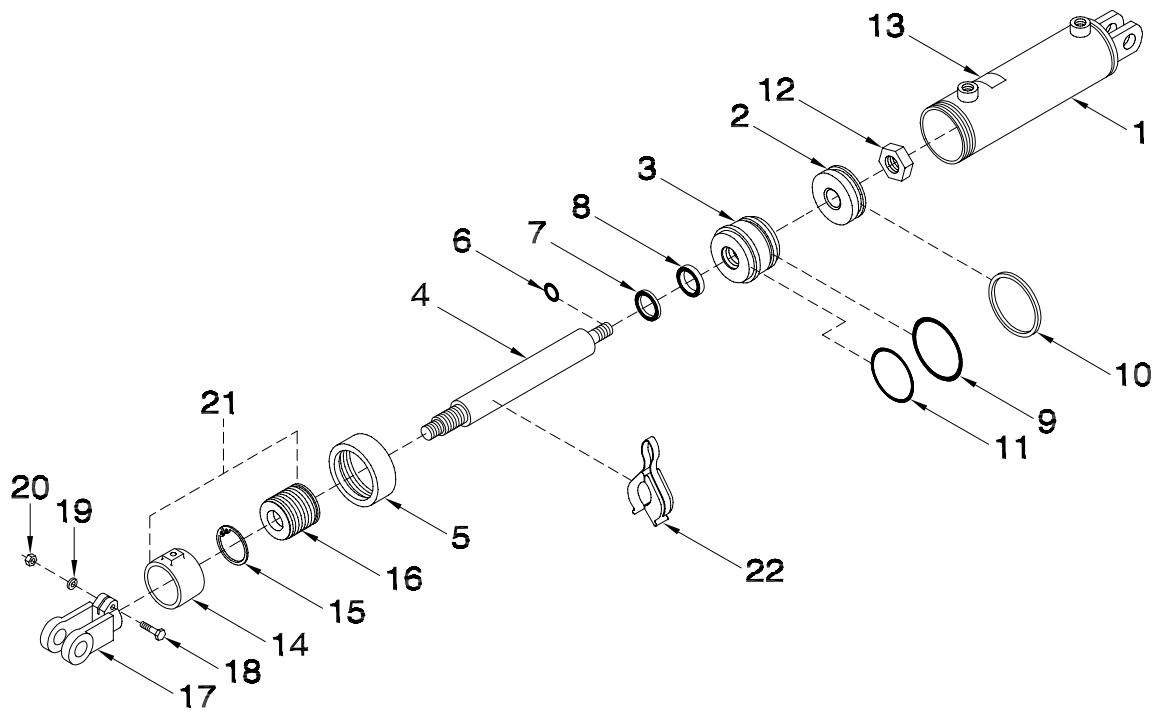

Item	Part No.	Description	Qty
		C26300 - 4 x12 - GLAND - BYPASS CYLINDER	
1	C26238	Barrel - 4 x 12 Gland-Bypass	1
2	C-2031	Piston - 4 DIa - 7/8 Shaft	1
3	C26290	Gland - 4 Dia - 1 3/8 Shaft	1
4	C26187	Cylinder Shaft - 1 3/8 Dia	1
5	C-2023	Collar - 4 Cylinder	1
6	C-2187	1 OD x 1/16 C/S 90D BUNA O-RING	1
7	C26265	1 3/8 ID x 3/16 C/S 90D URTH WIPER	1
8	C26264	1 3/8 ID x 5/16 90D URTH U-CUP	1
9	C-2030	4 OD x 3/16 C/S 90D BUNA O-RING	1
10	C-2025	4 OD x 3/16 C/S 90D URTH O-RING	1
11	C-2215	3 7/8 OD x 1/16 C/S 70A BUNA-N O-RING	1
12	C-2017	Locknut - 7/8 UNF Unitorque	1
13	C26304	Part # Plate for C26300	1
14	C22361	Sleeve - Outer	1
15	C10466	Snap Ring - Waldes #5100-212	1
16	C-2004	Inner Stroke Control Sleeve	1
17	C26188	Cast Clevis - 1 1/4 Dia Pin	1
18	W-477	Hex Bolt - 3/8 x 1 1/2 Lg	1
19	W-523	Lockwasher - 3/8	1
20	W-514	Hex Nut - 3/8	1
	C26300	Cylinder Assembly (Includes All Above Items)	
	C26308	Seal Kit (Includes Items #6, 7, 8, 9, 10 & 11)	
21	C-2001	Stroke Control Collar Assembly (Includes items #14, 15 & 16)	1
22	S25999	Spacer - Cylinder Stroke - Aluminum	1

Section 11: Lighting

Section Contents

7000 Series Air Cart 11-2

AIR CARTS 2001 TO PRESENT

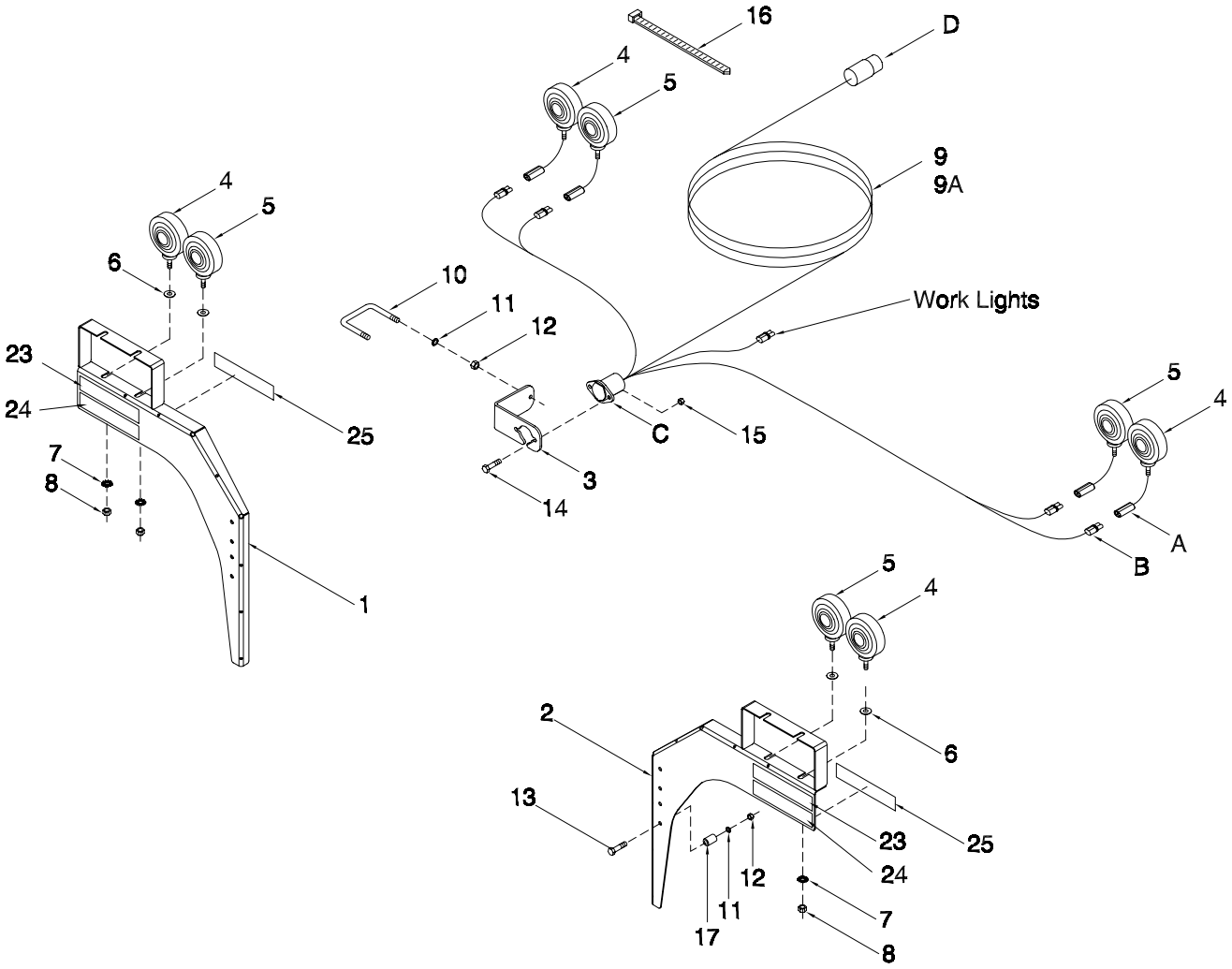

AIR CARTS PRIOR TO 2001

Note: Light item #5 is transferred from seeding unit.

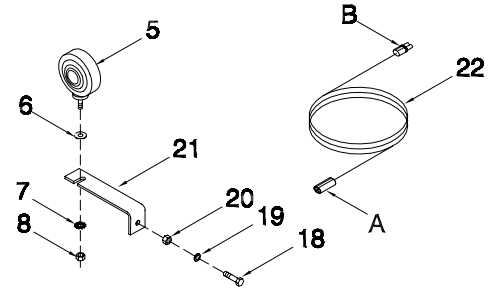

Tow Behind

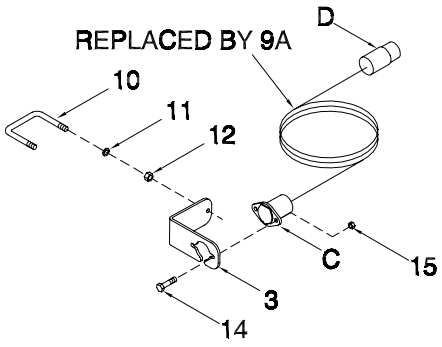

Tow Between

Safety Lights - 7000 Series Air Cart

Item	Part No.	Description	Qty
1	N32041	Bracket - Mounting Left	1
2	N32040	Bracket - Mounting Right	1
3	N32001	Bracket - Mounting	1
4	C32765	Light - Amber	2
5	C32766	Light - Red	2
6	W-539	Flat Washer - 1/2	3
7	D-5280	Star Washer - 1/2	3
8	W-516	Hex Nut - 1/2	3
9	C32051	Wiring Harness - Main Tow Behind	1
9A	C31497	Wiring Harness - Main Tow Between	1
10	N15098	U-Bolt - 3/8 x 4 x 5	1
11	W-523	Lockwasher - 3/8	6
12	W-514	Hex Nut - 3/8	6
13	W-475	Hex Bolt - 3/8 x 1 lg	4
	W-1854	Hex Bolt - 3/8 x 3 lg (Used with item 17)	4
14	N29048	Carriage Head Bolt - 5/16 x 1 lg	2
15	D-5278	Serrated Nut - 5/16	2
16	D-4951	Nylon Tie Strap - 7 3/8 lg	14
17	N19058	Spacer Bushing	4
18	W-485	Hex Bolt - 1/2 x 1 1/4 lg	4
19	W-525	Lockwasher - 1/2	4
20	W-516	Hex Nut - 1/2	4
21	N31426	Bracket - Mounting	1
22	C31439	Wiring Extension - 2 Pin - 10 ft	3
23	N34476	Reflector - Red	2
24	N34478	Reflector - Orange	2
25	N34477	Reflector - Amber	2
	C32761	Red Acrylic Lens	
	C32762	Amber Acrylic Lens	
	C32515	Bulb - #1156 (Amber Light)	
	C32656	Bulb - #1157 (Red Light)	
A	C32681	Recepticale Connector Assembly - GRAY - 2 Pin	
B	C32682	Plug Connector Assembly - GRAY - 2 Pin	
C	C32686	Connector Assembly - 7 Pin Socket	
	C32684	Interior - Socket - 7 Pin Connector	
	C32685	Protective Boot - Socket - 7 Pin Connector	
D	C32690	Connector Assembly - 7 Pin Plug (Complete with Cable Protector Spring)	
	C32688	Interior - Plug - 7 Pin Connector	
	C32689	Cable Protector Spring - Plug - 7 Pin Connector	
		ORDER KITS THROUGH WHOLE GOODS ONLY	
	N30746	Air Cart Light Kit (Tow Between) Includes item 1-16 except 9	
	N32053	Air Cart Light Kit (Tow Behind) Includes item 1-16 except 9A	

Notes

Index

B

BW-11 1-11, 1-17, 1-19
BW-8 6-3, 6-5, 6-8, 6-11, 6-13, 6-15

C

C-1429 10-6
C-1471 4-53, 4-54
C-1472 6-9, 6-11, 6-13, 6-15
C-1550 1-11, 1-17, 1-19, 2-15, 2-17, 2-20, 5-17, 5-22
C-2001 10-14
C-219 1-11, 1-13, 1-14, 1-17, 1-19, 1-21, 1-23, 1-25, 10-2
C-3016 1-13
C-3035 5-11, 5-15, 5-17, 5-19, 5-21, 9-3, 9-5, 9-7, 9-9, 9-11
C-304 1-11, 1-13, 1-14
C-333 1-9, 1-21, 1-23, 1-25
C-3525 10-2
C-3664 5-19, 5-21, 9-11
C-3902 1-11, 1-13, 1-14, 1-17, 1-19, 1-21, 1-23, 1-25
C-3918 1-3, 1-5, 1-7, 1-9, 1-17, 1-19, 1-23, 1-25, 4-49, 5-7, 5-9, 5-11, 9-3, 9-5
C-3932 1-11, 1-17, 1-19
C-4367 5-17, 5-19, 5-21, 5-22, 9-11
C-4369 5-17, 5-19, 5-21, 5-22, 9-11
C-4383 5-19, 5-21, 9-11
C-4385 5-17, 5-19, 5-21, 5-22, 9-11
C-4387 5-7, 5-11, 5-15, 5-17, 5-19, 5-21, 9-5, 9-9, 9-11
C-4389 5-17, 5-19, 5-21, 9-11
C-4394 5-21, 9-11
C-4396 5-19
C-4399 5-7, 5-11, 5-15, 5-17, 5-19, 5-21, 9-5, 9-9, 9-11, 10-10
C-4400 5-7, 5-11, 5-15, 5-17, 5-19, 5-21, 5-22, 9-5, 9-9, 9-11
C-4402 5-11, 5-15, 5-17, 5-19, 5-21, 9-5, 9-9, 9-11
C-4468 5-21, 9-11
C-4651 1-11, 1-17, 1-19
C-4698 5-7, 5-9, 5-11, 5-15, 5-17, 5-19, 5-21, 5-22, 8-3, 8-7, 8-11, 9-3, 9-5, 9-9, 9-11
C-507 10-4
C-508 1-13
C-695 1-11, 1-13, 1-14, 1-17, 1-19, 1-21, 1-23, 1-25
C-705 1-21, 1-23, 1-25
C-708 3-3
C-817 5-7, 5-9, 5-11, 5-13, 5-15, 5-17, 5-19, 5-21, 5-22, 9-3, 9-5, 9-7, 9-9, 9-11, 10-10
C-818 5-7, 5-9, 5-11, 5-17, 5-19, 5-21, 5-22, 9-3, 9-5, 9-11
C12375 5-5
C12376 5-5
C12609 10-6
C14840 5-21, 9-11, 10-10
C15318 9-7, 9-9, 9-11
C18597 1-21, 1-23, 1-25
C18760 1-11, 1-17, 1-19
C18761 1-21, 1-23, 1-25, 10-6
C18779 5-21, 9-11, 10-10
C22785 6-3, 6-5, 6-8, 6-11, 6-13, 6-15
C24585 5-19, 5-21, 9-11
C26259 9-3, 9-5
C26300 5-21, 9-11, 10-6, 10-10
C26333 5-21, 9-11, 10-10
C26343 5-15, 9-7, 9-9, 9-11
C26358 5-11, 5-15, 9-3, 9-5, 9-7, 9-9
C29572 2-15, 2-17
C29579 2-15, 2-17
C29610 6-11, 6-13
C31374 2-15, 2-17
C31439 11-3
C31497 11-3
C32051 11-3
C32515 11-3
C32656 11-3
C32681 11-3
C32682 11-3
C32684 11-3
C32685 11-3
C32686 11-3
C32688 11-3
C32689 11-3
C32690 11-3
C32761 11-3
C32762 11-3
C32765 11-3
C32766 11-3
C36358 5-17, 5-19, 5-21, 9-11

D

D-4808 5-9, 5-11, 9-3, 9-5
D-4838 5-5, 5-7, 5-9, 5-11, 5-13, 5-15, 5-17, 5-19, 5-21, 8-3, 8-7, 8-11, 9-3, 9-5, 9-7, 9-9, 9-11, 9-17, 10-10
D-4945 6-3, 6-5, 6-9, 6-11, 6-13, 6-15
D-4951 8-9, 11-3
D-5011 2-4, 2-8
D-5016 2-5, 2-9
D-5064 5-4
D-5098 1-3, 1-5, 1-7, 1-9
D-5131 1-11
D-5140 1-11, 1-17, 1-19
D-5204 4-53, 4-54
D-5234 2-4, 2-8, 2-12, 9-13, 9-15
D-5237 7-3
D-5239 3-2, 3-3, 3-4, 10-6
D-5247 1-13, 1-14, 3-4, 4-53, 4-54
D-5249 2-4, 2-8, 2-13, 5-9, 5-11, 9-3, 9-5
D-5259 1-3, 1-5, 1-7, 1-9, 2-4, 2-8, 4-54, 8-3, 8-7, 8-11, 9-13, 9-15, 9-17
D-5260 4-53, 4-54, 9-17
D-5262 5-5
D-5265 9-17
D-5272 1-3, 1-5, 1-9
D-5274 1-11, 1-13, 1-17, 1-19
D-5275 5-5
D-5277 1-3, 1-5, 1-9, 2-5, 2-9, 2-20, 4-3, 4-5, 4-7, 4-9, 4-11, 4-13, 4-17, 4-20, 4-22, 4-26, 4-29, 4-32, 4-35, 4-38, 4-40, 4-44, 4-46, 5-5, 7-3, 8-3, 8-7, 8-9, 8-11, 9-17
D-5278 1-3, 1-5, 1-7, 1-9, 2-5, 2-9, 4-3, 4-5, 4-7, 4-9, 4-11, 4-14, 4-17, 4-20, 4-22, 4-26, 4-29, 4-32, 4-35, 4-38, 4-40, 4-44, 4-46, 4-53, 4-54, 5-5, 6-3, 6-5, 6-9, 6-11, 6-13, 6-15, 8-3, 8-7, 8-11, 9-13, 9-15, 9-17, 11-3
D-5279 1-3, 1-5, 1-7, 1-9, 1-11, 1-17, 1-19, 1-21, 1-23, 1-25, 2-9, 4-3, 4-5, 4-7, 4-9, 4-11, 4-14, 4-17, 4-20, 4-22, 4-26, 4-29, 4-32, 4-35, 4-38, 4-40, 4-44, 4-46, 5-7, 5-11, 5-15, 5-17, 5-19, 5-21, 6-3, 6-5, 6-9, 6-11, 6-13, 6-15, 9-5, 9-9, 9-11, 9-17
D-5280 11-3
D-5487 6-3, 6-5, 6-9, 6-11, 6-13, 6-15
D-5488 1-3, 1-5, 1-7, 1-9, 2-10, 2-11
D-5489 1-3, 1-5, 1-7, 1-9, 1-11, 1-17, 1-19, 4-19, 4-22, 4-25, 4-28, 4-37, 4-40, 5-5, 8-9
D-5499 3-2, 3-3
D-5579 1-3, 1-5, 1-7, 1-9, 4-3, 4-5, 4-7, 4-9, 4-11, 4-13, 4-16, 4-19, 4-22, 4-25, 4-28, 4-32, 4-35, 4-37, 4-40, 4-44, 4-46, 4-53, 4-54
D-5590 4-53, 4-54
D-5721 1-3
D10553 1-11, 1-17, 1-19
D10747 9-13, 9-15
D10788 6-3, 6-5, 6-9, 6-11, 6-13, 6-15
D10803 6-3, 6-5, 6-9, 6-11, 6-13, 6-15
D10820 5-4
D12714 8-9
D12942 10-2
D14565 1-17, 1-19, 1-23, 1-25, 9-17
D17315 10-6
D17808 1-13, 2-4, 2-8, 2-13
D17946 2-12, 2-13, 9-13, 9-15

F

F-1677 4-26, 4-29, 4-38, 4-40
F-1767 1-9, 2-9, 4-3, 4-5, 4-7, 4-9, 4-11, 4-13, 4-16, 4-19, 4-22, 4-25, 4-28, 4-31, 4-34, 4-37, 4-40, 4-42, 4-46, 5-5, 5-11, 5-15, 5-17, 5-19, 5-21, 9-3, 9-5, 9-7, 9-9, 9-11
F-3056 1-13, 2-5, 2-9
F-3405 1-3, 1-5, 1-7, 1-9, 1-11, 1-13, 1-14, 1-17, 1-19, 1-21, 1-23, 1-25, 6-

3, 6-5, 6-9, 6-11, 6-13, 6-15, 10-6
F-3645 10-6
F-4560 5-7, 5-11, 5-15, 5-17, 5-19, 5-21, 9-5, 9-9, 9-11
F-4642 10-2
F12968 5-4
F24559 10-10

H

H-4408 10-10
H-4584 1-13, 2-4, 2-8
H-5545 5-19, 5-21, 9-11
H10462 1-21, 1-23, 1-25
H10592 2-17
H18268 2-20
H18746 5-19, 5-21, 9-11, 10-10
H21351 5-13, 5-15, 5-17, 5-19, 5-21, 6-5, 9-7, 9-9, 9-11
H27963 1-21, 1-23, 1-25

J

J12279 1-13, 1-14
J12281 6-3, 6-5, 6-9, 6-11, 6-13, 6-15

K

K-383 4-13
K-3830 1-3, 1-5, 1-9, 4-3, 4-5, 4-7, 4-9, 4-11, 4-16, 4-19, 4-22, 4-25, 4-28, 4-31, 4-34, 4-37, 4-40, 4-42, 4-46
K-5685 5-19, 10-10
K-5806 5-21, 9-11
K12962 6-8

M

M-3388 1-3, 1-5, 1-7, 1-9, 2-5, 2-9, 4-53, 4-54, 5-17, 5-19, 5-21, 5-22, 6-3, 6-5, 6-9, 6-11, 6-13, 6-15, 8-3, 8-7, 8-11, 9-11, 10-6

N

N11470 4-11, 8-3, 8-7, 8-11
N11847 4-52
N11905 4-3, 4-5, 4-7, 4-9, 4-11, 4-13, 4-16, 4-19, 4-22, 4-25, 4-28, 4-31, 4-34, 4-37, 4-40, 4-42, 4-46
N11907 4-3, 4-5, 4-7, 4-9, 4-11, 4-13, 4-16, 4-19, 4-22, 4-25, 4-28, 4-31, 4-34, 4-37, 4-40, 4-42, 4-46
N13900 1-3, 1-5, 1-7, 1-9
N13901 5-7, 5-9, 5-11, 9-3, 9-5
N13950 3-4
N13951 3-4
N13952 3-4
N13953 3-4
N13954 3-4
N13955 3-4
N13956 3-4
N13957 3-4
N13958 3-4
N13959 3-4
N13962 3-4, 10-6
N13963 3-4
N13964 3-4
N13968 3-2, 3-4
N14244 5-4
N14247 5-4
N14248 5-4
N14249 5-4
N15010 5-4
N15018 5-4
N15022 4-3, 4-5, 4-7, 4-9, 4-14, 4-17, 4-20, 4-22, 4-26, 4-29, 4-32, 4-35, 4-38, 4-40, 4-44, 4-46
N15023 5-7, 5-11, 5-15, 5-17, 5-19, 5-21, 9-5, 9-9, 9-11
N15024 5-7, 5-11, 5-15, 5-17, 5-19, 5-21, 6-3, 6-5, 6-8, 6-11, 6-13, 6-15, 9-5, 9-9, 9-11
N15032 5-7, 5-11, 5-15, 5-17, 5-19, 5-21, 9-5, 9-9, 9-11
N15033 5-7, 5-11, 5-15, 5-17, 5-19, 5-21, 9-5, 9-9, 9-11
N15045 6-3, 6-5, 6-8, 6-11, 6-13, 6-15
N15049 1-21, 1-23, 1-25, 10-4
N15053 5-4
N15094 1-3, 1-5, 1-7, 1-9
N15096 4-3, 4-5, 4-7, 4-9, 4-11, 4-25, 4-28, 4-31, 4-34, 4-37, 4-40, 4-42, 4-46, 5-4
N15097 2-18, 4-3, 4-5, 4-7, 4-9, 4-13, 4-16, 4-19, 4-22, 4-25, 4-28, 4-31, 4-34, 4-37, 4-40, 4-42, 4-46
N15098 2-15, 2-17, 4-3, 4-5, 4-7, 4-9, 4-13, 4-16, 4-19, 4-22, 4-25, 4-28, 4-31, 4-34, 4-37, 4-40, 4-42, 4-46, 4-49, 5-19, 5-21, 8-9, 9-11, 11-3
N15102 4-3, 4-5, 4-7, 4-9, 4-11, 4-13, 4-16, 4-19, 4-22, 4-25, 4-28, 4-31, 4-34, 4-37, 4-40, 4-42, 4-46
N15105 4-3, 4-5, 4-7, 4-9, 4-25, 4-28, 4-31, 4-34, 4-37, 4-40, 4-42, 4-46
N15107 4-3, 4-5, 4-7, 4-9, 4-13, 4-16, 4-19, 4-22, 4-25, 4-28, 4-31, 4-34, 4-37, 4-40, 4-42, 4-46
N15114 2-10, 2-11
N15135 4-3, 4-5, 4-7, 4-9, 4-11, 4-13, 4-16, 4-19, 4-22, 4-25, 4-28, 4-31, 4-34, 4-37, 4-40, 4-42, 4-46, 4-51
N15196 5-7
N15410 5-4
N15462 6-3, 6-5, 6-8, 6-11, 6-13, 6-15
N15594 4-3, 4-5, 4-7, 4-9, 4-13, 4-16, 4-19, 4-22, 4-25, 4-28, 4-31, 4-34, 4-37, 4-40, 4-42, 4-46
N15595 4-3, 4-5, 4-7, 4-9, 4-11, 4-13, 4-16, 4-19, 4-22, 4-25, 4-28, 4-31, 4-34, 4-37, 4-40, 4-42, 4-46
N15715 5-4
N15716 1-3, 1-5, 1-7, 1-9, 2-10, 2-11, 4-3, 4-5, 4-7, 4-9, 4-11, 4-13, 4-16, 4-19, 4-22, 4-25, 4-28, 4-31, 4-34, 4-37, 4-40, 4-42, 4-46, 5-4
N15757 2-5, 2-8, 4-53, 4-54
N15930 4-3, 4-5, 4-7, 4-9, 4-11, 4-13, 4-16, 4-19, 4-22, 4-25, 4-28, 4-31, 4-34, 4-37, 4-40, 4-42, 4-46
N15982 5-7, 5-11, 5-15, 5-17, 5-19, 5-21, 6-3, 6-5, 6-8, 6-11, 6-13, 6-15, 9-5, 9-9, 9-11
N15983 6-9, 6-11, 6-13, 6-15
N15991 5-9, 5-11, 5-13, 5-15, 9-3, 9-5, 9-7, 9-9, 9-11
N16025 3-2, 3-3
N16113 2-4, 2-8
N16143 5-13, 5-15, 5-17, 5-19, 5-21, 9-7, 9-9, 9-11
N16146 5-7
N16156 2-4, 2-8
N16181 5-13, 5-15, 5-17, 5-19, 5-21, 9-7, 9-9, 9-11
N16226 1-11, 1-17, 1-19
N16263 5-9, 5-11, 5-13, 5-15, 5-17, 5-19, 5-21, 7-3, 9-3, 9-5, 9-7, 9-9, 9-11
N16265 5-9, 5-11, 5-13, 5-15, 9-3, 9-5, 9-7, 9-9
N16346 5-9, 5-11, 9-3, 9-5
N16359 5-9, 5-11, 5-13, 5-15, 5-17, 5-19, 5-21, 9-3, 9-5, 9-7, 9-9, 9-11
N16388 5-9, 5-11, 5-13, 5-15, 5-17, 5-19, 5-21, 9-3, 9-5, 9-7, 9-9, 9-11
N16399 5-9, 5-11, 5-13, 5-15, 5-17, 5-19, 5-21, 9-3, 9-5, 9-7, 9-9, 9-11
N16454 5-13, 5-15, 5-17, 5-19, 5-21, 9-7, 9-9, 9-11
N16471 8-3, 8-7, 8-11
N16473 8-3, 8-7, 8-11
N16474 8-3, 8-7, 8-11
N16504 4-13, 4-16, 4-19, 4-22, 4-25, 4-28, 4-31, 4-34, 4-37, 4-40, 4-42, 4-46
N16507 4-13, 4-16, 4-19, 4-22, 4-25, 4-28, 4-31, 4-34, 4-37, 4-40, 4-42, 4-46
N16563 8-3, 8-7, 8-11
N16564 8-3, 8-7, 8-11
N16565 8-3, 8-7, 8-11
N16608 5-7, 5-9, 5-11, 5-17, 5-19, 5-21, 5-22, 9-3, 9-5, 9-11
N16621 5-9, 5-11, 5-13, 5-15, 5-17, 5-19, 5-21, 9-3, 9-5, 9-7, 9-9, 9-11
N16689 4-13, 4-16, 4-19, 4-22, 4-25, 4-28, 4-31, 4-34, 4-37, 4-40, 4-42, 4-46
N16698 8-3, 8-7, 8-9, 8-11, 9-17
N16708 7-3
N16709 7-3
N16710 7-3
N16712 7-3
N16716 7-3
N16731 5-7, 5-11, 5-15, 5-17, 5-19, 5-21, 6-3, 6-5, 6-8, 6-11, 6-13, 6-15, 9-5, 9-9, 9-11
N16853 2-5, 2-9
N16862 2-4, 2-8, 2-20
N16893 2-5, 2-9, 2-15
N16903 2-4, 2-8
N17217 6-3, 6-5, 6-8, 6-11, 6-13, 6-15

N17232 6-3, 6-5, 6-9, 6-11, 6-13, 6-15
N19000 4-3, 4-5, 4-7, 4-9, 4-11, 4-14, 4-17, 4-20, 4-22, 4-26, 4-29, 4-32, 4-35, 4-38, 4-40, 4-44, 4-46
N19007 5-4
N19008 5-4
N19009 5-4
N19010 5-4
N19020 6-9, 6-11, 6-13
N19023 5-9, 5-11, 5-13, 5-15, 9-3, 9-5, 9-7, 9-9
N19029 1-11, 1-13, 1-14, 1-17, 1-19, 1-21, 1-23, 1-25
N19030 4-3, 4-5, 4-7, 4-9, 4-11, 4-19, 4-22, 4-25, 4-28, 4-31, 4-34, 4-37, 4-40, 4-42, 4-46
N19031 5-11, 5-15, 5-17, 5-19, 5-21, 6-3, 6-5, 6-9, 6-11, 6-13, 6-15, 9-3, 9-5, 9-7, 9-9, 9-11
N19032 6-3, 6-5, 6-9, 6-11, 6-13, 6-15
N19033 6-3, 6-5, 6-9, 6-11, 6-13, 6-15
N19034 6-3, 6-5, 6-9, 6-11, 6-13, 6-15
N19039 4-3, 4-5, 4-7, 4-9, 4-11
N19042 4-3, 4-5, 4-7, 4-9, 4-11
N19049 1-11
N19051 1-11, 1-17, 1-19
N19054 1-11, 1-17, 1-19
N19055 1-11, 1-17, 1-19
N19058 1-19, 1-25, 11-3
N19065 1-11, 1-17, 1-19
N19072 5-4
N19083 6-3
N19084 5-4, 7-3
N19108 1-3, 1-5, 1-7, 1-9
N19109 1-3, 1-5, 1-7, 1-9
N19127 1-3, 1-5, 1-7, 1-9
N19166 1-11, 1-14, 1-17, 1-19, 1-21
N19167 3-2, 3-3
N19168 3-2, 3-3
N19169 3-2, 3-3
N19170 3-2, 3-3
N19171 3-2, 3-3
N19172 3-2, 3-3
N19173 1-13, 1-14, 3-2, 3-3
N19174 1-13, 1-14, 3-2
N19192 6-5, 6-9, 6-11, 6-13
N19195 6-3, 6-5, 6-15
N19196 1-11, 1-17, 1-19
N19203 1-11, 1-17, 1-19
N19211 1-3, 1-5, 1-7, 1-9
N19219 2-4
N19220 2-4, 2-8
N19221 2-4
N19223 1-13, 2-4, 2-8
N19224 1-13, 2-4, 2-8
N19230 2-4, 9-13
N19232 2-4, 2-8
N19237 1-13, 2-4, 2-8, 2-12, 2-13
N19258 2-4, 2-8
N19261 2-4, 2-8, 2-13
N19269 2-10, 2-11
N19283 2-4, 2-8, 2-12, 9-13, 9-15
N19288 2-4, 2-8
N19295 5-4
N19307 1-11, 1-13, 1-14, 1-17, 1-19
N19312 5-4
N19317 5-4
N19318 5-4
N19334 5-4
N19336 5-11, 9-3, 9-5
N19337 5-11, 5-15, 5-17, 5-19, 5-21, 9-3, 9-5, 9-7, 9-9, 9-11
N19338 5-11, 9-3, 9-5
N19339 5-11
N19340 5-11, 5-15, 5-17, 5-19, 5-21, 9-3, 9-5, 9-7, 9-9, 9-11
N19341 5-11, 5-15, 5-17, 5-19, 5-21, 9-3, 9-5, 9-7, 9-9, 9-11
N19342 5-9, 5-11
N19343 5-9, 5-11, 9-3, 9-5
N19344 5-9, 5-11, 9-3, 9-5
N19345 9-3, 9-5, 9-7, 9-9, 9-11
N19346 5-9, 5-11, 9-3, 9-5
N19348 5-9
N19350 5-4
N19357 5-9, 5-11, 9-3, 9-5
N19365 5-7, 5-11, 5-15, 5-17, 5-19, 5-21, 9-5, 9-9, 9-11
N19366 1-3, 1-5, 1-7, 1-9
N19368 1-11, 1-17, 1-19
N19369 5-4, 7-3
N19375 5-4
N19380 5-4
N19388 5-4
N19395 4-3, 4-5, 4-7, 4-9, 4-19, 4-22, 4-25, 4-28, 4-31, 4-34, 4-37, 4-40, 4-42, 4-46
N19398 4-3, 4-5, 4-7, 4-9, 4-19, 4-22, 4-25, 4-28, 4-31, 4-34, 4-37, 4-40, 4-42, 4-46
N19406 4-3, 4-5, 4-7, 4-9, 4-11, 4-13, 4-16, 4-19, 4-22, 4-25, 4-28, 4-31, 4-34, 4-37, 4-40, 4-42, 4-46
N19409 4-3, 4-5, 4-7, 4-9, 4-13, 4-16, 4-19, 4-22, 4-25, 4-28, 4-31, 4-34, 4-37, 4-40, 4-42, 4-46
N19410 4-3, 4-5, 4-13, 4-16, 4-31, 4-34, 4-42, 4-46
N19423 1-11, 1-13, 1-14
N19428 4-3, 4-5, 4-7, 4-9, 4-11, 4-13, 4-16, 4-19, 4-22, 4-25, 4-28, 4-31, 4-34, 4-37, 4-40, 4-42, 4-46
N19432 5-11, 9-3, 9-5
N19434 5-9, 5-11, 9-3, 9-5
N19437 1-3, 1-5, 1-7, 1-9
N19442 5-9, 5-11, 9-3, 9-5
N19443 5-9, 5-11, 9-3, 9-5
N19448 1-11, 1-17, 1-19, 4-3, 4-5, 4-7, 4-9, 4-13, 4-16, 4-19, 4-22, 4-25, 4-28, 4-31, 4-34, 4-37, 4-40, 4-42, 4-46
N19449 4-3, 4-5, 4-7, 4-9, 4-11, 4-13, 4-16, 4-19, 4-22, 4-25, 4-28, 4-31, 4-34, 4-37, 4-40, 4-42, 4-46, 6-3, 6-5, 6-8, 6-11, 6-13, 6-15, 9-13, 9-15
N19450 8-3, 8-7, 8-11
N19451 5-9, 5-11, 9-3, 9-5
N19452 5-9, 5-11, 9-3, 9-5
N19454 5-7
N19458 5-7, 5-9, 5-11, 5-17, 5-19, 5-21, 5-22, 9-3, 9-5, 9-11
N19460 2-4, 2-8, 2-12, 2-13, 9-13, 9-15
N19463 7-3
N19470 2-20
N19475 5-9, 5-11, 9-3, 9-5
N19480 6-3, 6-5, 6-8, 6-11, 6-13, 6-15
N19481 6-3, 6-5, 6-15
N19484 3-2, 3-3, 3-4
N19496 1-3, 1-5, 1-7, 1-9
N19498 7-3
N19499 7-3
N19500 7-3
N19501 7-3
N19502 7-3
N19505 7-3
N19520 5-4
N19531 4-3, 4-5, 4-7, 4-9, 4-13, 4-16, 4-19, 4-22, 4-25, 4-28, 4-31, 4-34, 4-37, 4-40, 4-42, 4-46
N19546 5-13, 5-15
N19548 5-17, 5-19, 5-21, 5-22, 9-11
N19549 5-15, 5-17, 5-19, 5-21, 9-3, 9-7, 9-9, 9-11
N19563 1-3, 1-5, 1-7, 1-9
N19564 7-3
N19565 7-3
N19573 4-3, 4-5, 4-7, 4-9, 4-19, 4-22, 4-25, 4-28, 4-31, 4-34, 4-37, 4-40, 4-42, 4-46
N19575 4-7, 4-9, 4-19, 4-22, 4-25, 4-28, 4-37, 4-40
N19577 1-13, 2-4, 2-8, 2-13
N19578 5-9, 5-11, 5-13, 5-15, 9-3, 9-5
N19586 3-2, 3-3
N19599 8-3, 8-7, 8-11
N19605 10-6
N19660 5-4
N19677 5-4
N19678 1-3
N19687 2-4, 2-8, 2-10, 2-11, 9-13, 9-15
N19690 4-3, 4-5, 4-7, 4-9, 4-11, 4-13, 4-16, 4-19, 4-22, 4-25, 4-28, 4-31, 4-34, 4-37, 4-40, 4-42, 4-46
N19693 4-3, 4-5, 4-7, 4-9, 4-11, 4-13, 4-16, 4-19, 4-22, 4-25, 4-28, 4-31, 4-34, 4-37, 4-40, 4-42, 4-46
N19700 4-3, 4-5, 4-7, 4-9, 4-11
N19706 2-4, 2-8, 2-12, 2-13, 9-13, 9-15
N19708 3-2, 3-3
N19709 3-2, 3-3
N19713 5-11, 5-15, 5-17, 5-19, 5-21, 9-3, 9-5, 9-7, 9-9, 9-11
N19717 1-11, 1-17, 1-19, 4-3, 4-5, 4-7, 4-9, 4-13, 4-16, 4-19, 4-22, 4-25, 4-28, 4-31, 4-34, 4-37, 4-40, 4-42, 4-46
N19723 1-3, 5-5
N19726 1-3, 1-5, 1-9
N19727 3-2, 3-3
N19736 6-3, 6-5, 6-8, 6-11, 6-13, 6-15
N19737 6-3, 6-5, 6-11, 6-

13, 6-15
N19745 6-3, 6-5, 6-8, 6-11, 6-13, 6-15
N19760 2-8, 9-15
N19770 4-26, 4-29, 4-32, 4-35, 4-38, 4-40, 4-44, 4-46, 4-49
N19774 2-12, 2-13
N19777 6-3, 6-5, 6-8, 6-11, 6-13, 6-15
N19778 6-3, 6-5, 6-9, 6-13, 6-15
N19784 6-3, 6-5, 6-8, 6-11, 6-13, 6-15
N19788 6-3, 6-8, 6-15
N19791 1-3, 1-5, 1-7, 1-9
N19794 1-11
N19795 1-11, 1-13, 1-14
N19796 1-11
N20772 1-11, 1-17, 1-19
N21008 1-11
N21024 2-13
N21055 4-49
N21057 4-49
N21060 4-49
N21061 4-49
N21076 6-8
N21077 6-3
N21079 6-3, 6-5, 6-15
N21080 4-49
N21081 1-13
N21189 5-15, 5-17, 5-19, 5-21, 9-7, 9-9, 9-11
N21266 1-3, 1-5, 1-7, 1-9
N21287 2-20
N21288 2-4, 2-8, 9-13, 9-15
N21293 6-3, 6-5, 6-8, 6-11, 6-15
N21294 6-3, 6-5, 6-8, 6-11, 6-13, 6-15
N21300 1-17, 1-19
N21336 5-4
N21396 5-4
N21450 1-3, 1-5, 1-7, 1-9
N21475 1-3, 1-5, 1-9, 5-9, 5-11
N21520 8-3, 8-7, 8-11
N21538 2-20, 8-4, 9-17
N21539 2-20, 8-4, 9-17
N21602 2-10, 2-11
N21604 1-3, 1-5, 1-7, 1-9
N21612 2-10, 2-11
N21632 5-9, 5-11, 9-3, 9-5
N21633 5-4
N21653 8-3, 8-7, 8-11
N21654 8-3, 8-7, 8-11
N21659 2-10, 2-11
N21671 8-3, 8-7, 8-11
N21672 2-8
N21690 5-7, 5-9, 5-11, 9-3, 9-5
N21691 5-7, 5-9, 5-11, 9-3, 9-5
N21706 6-13
N21721 5-7, 5-11, 5-15, 5-17, 5-19, 5-21, 9-5, 9-9, 9-11
N21735 6-8, 6-11, 6-13
N21746 4-46
N22777 2-4, 2-8, 9-13, 9-15
N22778 2-5, 2-9, 4-14, 4-17, 4-20, 4-22, 4-26, 4-29, 4-32, 4-35, 4-38, 4-40, 4-44, 4-46, 4-52, 6-3, 6-5, 6-9, 6-11, 6-13, 6-15, 9-13, 9-15
N22793 1-11, 1-17, 1-19
N22794 1-11, 1-17, 1-19
N22797 1-11, 1-17, 1-19
N22799 6-3, 6-5, 6-8, 6-11, 6-13, 6-15
N22800 1-11, 1-17, 1-19
N22802 6-3, 6-5, 6-8, 6-11, 6-13, 6-15
N22809 6-3, 6-5, 6-8, 6-11, 6-13, 6-15
N23188 6-15
N24301 1-11, 1-13, 1-14, 1-17, 1-19, 1-21, 1-23, 1-25
N24302 8-4, 8-8, 8-12
N24309 4-49
N24311 4-49
N24391 8-4, 8-8, 8-12
N24396 4-3, 4-5, 4-7, 4-9, 4-11, 4-13, 4-16, 4-19, 4-22, 4-25, 4-28, 4-31, 4-34, 4-37, 4-40, 4-42, 4-46
N24412 1-11, 1-13, 1-14, 1-17, 1-19, 1-21, 1-23, 1-25
N24421 6-3, 6-5, 6-8, 6-11, 6-13, 6-15
N24583 2-20
N24595 5-7, 5-11, 5-15, 5-17, 5-19, 5-21, 6-3, 6-5, 6-8, 6-11, 6-13, 6-15, 9-5, 9-9, 9-11
N24774 2-4, 2-8
N24775 1-17, 1-19, 1-21, 1-23, 1-25
N24779 2-5, 2-9, 9-13, 9-15
N24780 2-4, 2-8, 9-13, 9-15
N24782 2-4, 2-8
N24792 1-3, 1-5, 1-7, 1-9
N25319 5-7, 5-11, 5-15, 5-17, 5-19, 5-21, 6-3, 6-5, 6-8, 6-11, 6-13, 6-15, 9-5, 9-9, 9-11
N25457 1-5, 1-7, 1-9
N25475 1-17, 1-19
N25479 3-4
N25507 5-11, 5-15, 5-17, 5-19, 5-21, 9-9, 9-11
N25508 5-9, 5-11, 5-13, 5-15, 5-17, 5-19, 5-21, 9-9, 9-11
N25544 6-3, 6-5, 6-15
N25595 6-8
N25616 3-3
N25617 3-4
N25644 5-13, 5-15, 5-17, 5-19, 5-21, 9-7, 9-9, 9-11
N25668 6-8, 6-13
N25674 1-11, 1-13, 1-14, 1-17, 1-19
N25741 6-8
N25753 6-8
N25754 5-9, 5-11, 9-3, 9-5
N25755 3-4
N27000 1-11
N27001 1-11, 1-13, 1-14, 1-21
N27002 1-11, 1-13, 1-14, 1-21
N27005 1-3, 1-5, 1-7, 1-9
N27006 8-3, 9-17
N27007 8-3, 9-17
N27008 8-3, 9-17
N27009 8-3, 9-17
N27010 8-3, 8-7, 9-17
N27010R 8-3, 8-7
N27011 2-5, 2-9, 2-20
N27012 2-5, 2-9, 2-20
N27013 2-5, 2-9
N27014 2-5
N27015 2-5, 2-9
N27020 1-21
N27021 1-17, 1-19, 1-23, 1-25
N27025 1-11, 1-13, 1-14
N27030 1-11
N27035 1-11, 1-13, 1-14
N27041 1-17, 1-19, 1-21, 1-23, 1-25
N27042 1-17, 1-19, 1-21, 1-23, 1-25
N27045 4-3, 4-5, 4-7, 4-9, 4-11, 4-37, 4-42
N27050 4-3, 4-7, 4-11
N27059 1-17, 1-19
N27060 1-23, 1-25
N27065 1-17, 1-19
N27070 1-11, 1-17, 1-19, 1-21, 1-23, 1-25
N27080 1-3, 1-5, 1-7
N27087 2-10, 2-11
N27088 2-10, 2-11
N27089 2-10, 2-11
N27090 2-10, 2-11
N27097 2-10, 2-11
N27098 2-10, 2-11
N27099 2-10, 2-11
N27100 1-7, 2-10
N27119 8-3, 8-5, 8-7
N27141 1-3
N27142 1-3
N27143 1-3
N27155 1-3, 1-5, 1-7, 1-9
N27191 1-3, 1-9
N27192 1-3, 1-9
N27193 1-3, 1-9
N27251 1-5
N27252 1-5
N27253 1-5
N27311 1-5
N27312 1-5
N27313 1-5
N27329 4-3, 4-5, 4-7, 4-9, 4-14, 4-17, 4-20, 4-22, 4-26, 4-29, 4-32, 4-35, 4-38, 4-40, 4-44, 4-46
N27330 4-3, 4-13
N27335 4-13
N27336 1-3
N27337 1-3, 1-9
N27338 1-5
N27339 1-5
N27340 4-3, 4-13
N27345 4-13
N27350 2-5, 2-9
N27360 1-3, 1-5, 1-7, 1-9, 4-3, 4-5, 4-7, 4-9, 4-11, 4-14, 4-17, 4-20, 4-22, 4-26, 4-29, 4-32, 4-35, 4-38, 4-40, 4-44, 4-46
N27370 2-5, 2-9
N27375 1-3, 1-9
N27380 1-3, 1-9
N27385 1-5
N27390 1-5
N27395 2-5, 2-9
N27400 2-4, 2-8
N27401 2-4, 2-8
N27402 2-4, 2-8, 2-20
N27403 2-4, 2-8
N27404 2-4, 2-8
N27405 2-4, 2-8
N27406 2-4, 2-8
N27410 2-4, 2-8
N27411 2-4, 2-8, 9-13, 9-15
N27412 2-5, 2-9
N27413 2-5, 2-9
N27414 2-5, 2-9

N27415 2-5, 2-9
N27416 2-5, 2-9
N27417 2-5, 2-9
N27418 2-5, 2-9
N27419 2-5, 2-9
N27420 2-5, 2-9
N27421 2-5, 2-9
N27422 2-5, 2-9
N27423 2-5, 2-9
N27424 2-4, 2-5, 2-8, 2-9
N27425 2-4, 2-8, 2-9
N27426 2-4, 2-5, 2-8, 2-9
N27427 2-5, 2-9
N27428 2-4, 2-5, 2-9
N27429 2-5, 2-9
N27430 2-5, 2-9
N27431 2-5, 2-9
N27432 2-5, 2-9
N27433 2-5, 2-9
N27434 2-5, 2-9
N27435 2-4, 2-5, 2-9
N27436 2-5, 2-9
N27437 2-5, 2-9
N27438 2-5, 2-9
N27439 2-5, 2-9
N27440 2-4, 2-5, 2-9
N27441 2-5, 2-9
N27442 2-5, 2-9
N27443 2-5, 2-9
N27444 2-5, 2-9
N27445 2-5, 2-9
N27450 4-13, 4-16, 4-19, 4-22, 4-25, 4-28, 4-31, 4-34, 4-37, 4-40, 4-42, 4-46
N27455 1-3, 1-5, 1-7, 1-9
N27460 4-13, 4-19
N27465 1-11, 1-17, 1-19
N27466 5-5
N27470 1-3
N27475 1-3, 1-9
N27480 1-5
N27485 1-5
N27490 4-3, 4-5
N27495 4-13, 4-16
N27586 10-2
N27589 5-7, 5-9, 5-11, 9-3, 9-5
N27590 1-3
N27591 1-3, 1-5, 1-7
N27592 1-5, 1-7
N27593 1-3
N27594 1-3
N27595 1-5, 1-7
N27596 1-5, 1-7
N27600 2-4, 2-8
N27601 5-9, 5-11, 9-3, 9-5
N27602 5-9, 5-11, 9-3, 9-5
N27605 2-10, 2-11
N27606 8-4, 8-8, 8-12
N27608 8-3, 9-17
N27609 8-3, 8-7, 8-11
N27613 8-4, 8-8, 8-12, 9-17
N27614 8-4, 8-5, 8-8, 8-12, 9-17
N27615 8-4, 8-8, 8-12
N27616 8-3, 8-7, 8-11
N27617 8-3, 8-7, 8-11
N27618 8-3, 8-7, 8-11
N27619 8-3, 8-7, 8-11
N27621 8-3, 8-7, 8-11
N27623 8-3, 8-7, 8-11
N27624 8-3, 8-7, 8-11
N27625 8-3, 8-7, 8-11, 9-17
N27626 1-13, 2-4
N27627 2-4
N27628 2-4
N27629 2-4
N27630 2-4, 2-8
N27631 2-12, 2-13
N27632 2-13
N27633 2-12, 2-13
N27635 5-4
N27636 5-4
N27639 6-3
N27645 6-3, 6-5, 6-15
N27650 6-8, 6-11
N27659 6-3, 6-15
N27665 6-8
N27669 6-8
N27675 6-8, 6-11
N27680 6-3, 6-5
N27685 6-8
N27689 6-8, 6-13
N27695 6-8
N27700 6-3, 6-5, 6-15
N27705 6-3, 6-5, 6-8, 6-11, 6-13, 6-15
N27706 6-3, 6-5, 6-8, 6-11, 6-13, 6-15
N27707 4-19
N27708 6-3, 6-8, 6-15
N27709 4-19, 4-22, 4-25, 4-28, 4-37, 4-40
N27715 1-3, 1-5, 1-7, 1-9
N27719 4-13, 4-16, 4-31, 4-34, 4-42, 4-46
N27721 4-13, 4-16, 4-31, 4-34, 4-42, 4-46
N27725 1-11, 1-13, 1-14
N27730 1-11
N27735 1-11, 1-13, 1-14
N27736 5-4
N27737 5-4
N27738 5-4
N27739 5-4
N27741 5-4
N27743 5-4
N27744 5-4
N27750 6-3
N27755 6-3, 6-5, 6-15
N27759 6-3, 6-5, 6-8, 6-11, 6-13, 6-15
N27760 6-8, 6-11, 6-13
N27761 6-3, 6-5, 6-8, 6-11, 6-13, 6-15
N27765 6-8
N27790 1-11
N27795 1-11
N27843 4-53, 4-54
N27847 2-20
N27848 2-20
N27849 2-12, 2-13
N27851 1-3, 1-5, 1-7, 1-9
N27852 1-3, 1-5, 1-7, 1-9
N27853 1-3, 1-5, 1-7, 1-9
N27856 1-3, 1-5, 1-7, 1-9
N27861 1-3, 1-5, 1-7, 1-9
N27862 1-3, 1-5, 1-7, 1-9
N27863 1-3, 1-5, 1-7, 1-9
N27864 1-11, 1-13, 1-14, 1-17, 1-19, 1-21, 1-23, 1-25
N27871 5-4
N27872 4-19, 4-22, 4-25, 4-28
N27873 5-4
N27874 5-4
N28039 2-20
N28079 2-20
N28099 2-20
N28121 4-26, 4-29, 4-32, 4-35
N28122 4-26, 4-29, 4-32, 4-35
N28190 7-3
N28199 8-3, 9-17
N28302 4-13, 4-16, 4-31, 4-34, 4-42, 4-46
N28327 6-8, 6-11
N28328 6-8, 6-11, 6-13
N28332 5-17, 5-19, 5-22
N28370 1-21, 10-6
N28375 1-23, 10-6
N28390 10-6
N28487 8-3, 8-7, 8-11
N28488 8-3, 8-7, 8-11
N28489 8-3, 8-7, 8-11
N28490 8-3, 8-7, 8-11
N28491 8-3, 8-7, 8-11
N28492 2-10
N28575 6-8
N28577 6-8
N28658 5-9, 5-11, 9-3, 9-5
N28659 5-9, 5-11, 9-3, 9-5
N28667 1-3, 1-5, 1-7, 1-9
N28671 8-4, 8-8, 8-12
N28805 4-52
N28806 4-52
N28807 4-52
N28808 4-52
N28809 4-52
N28811 4-13, 4-16, 4-31, 4-34, 4-42, 4-46
N28812 4-53
N28813 4-14, 4-17, 4-20, 4-22, 4-26, 4-29, 4-32, 4-35, 4-44, 4-46
N28814 4-14, 4-17, 4-20, 4-22, 4-29, 4-32, 4-35, 4-44, 4-46
N28817 4-53
N28819 4-53, 4-54
N28820 4-53
N28822 4-53
N28823 4-53
N28824 4-13, 4-16, 4-19, 4-22, 4-53
N28825 4-19
N28831 1-3, 1-5, 1-7, 1-9, 2-10
N28901 8-4, 8-8, 8-12, 9-17
N28902 2-20, 8-4, 8-8, 8-12, 9-17
N28903 8-4, 8-8, 8-12
N28904 2-20, 8-4, 8-8, 8-12
N28905 2-20, 8-4, 8-8, 8-12
N28906 2-20, 8-4, 8-8, 8-12
N28915 6-3, 6-5, 6-8, 6-15
N28920 6-8
N28924 2-11
N28925 3-2
N28926 3-2
N28927 2-11
N28928 2-11
N28929 2-11
N28930 1-21
N28953 10-6
N28954 10-6
N28960 10-6
N28962 10-6
N28966 10-6
N28971 10-6
N28994 10-6
N28997 10-6
N29048 1-3, 1-5, 1-7, 1-9, 11-3
N29049 1-3, 1-5, 1-7, 1-9
N29057 4-54
N29058 4-54
N29061 4-14, 4-17, 4-20, 4-22, 4-26, 4-29, 4-32, 4-35, 4-38, 4-40
N29062 4-14, 4-20, 4-29, 4-

35
N29063 1-3, 1-5, 1-7, 1-9
N29080 4-52
N29099 1-9
N29143 8-4, 8-8, 8-12, 9-17
N29144 2-20, 8-4, 8-8, 8-12
N29145 8-4, 8-8, 8-12
N29147 8-4, 8-8, 8-12
N29148 8-4, 8-8, 8-12
N29149 8-4, 8-8, 8-12
N29150 8-4, 8-8, 8-12
N29151 8-4, 8-8, 8-12, 9-17
N29152 8-4, 8-8, 8-12, 9-17
N29153 8-4, 8-8, 8-12, 9-17
N29200 2-8
N29201 1-9
N29276 3-2, 3-3
N29278 3-2, 3-3
N29280 1-3, 1-5, 1-9
N29294 3-2, 3-3
N29296 9-17
N29298 3-3
N29300 9-17
N29301 9-17
N29303 9-17
N29304 9-17
N29305 9-17
N29306 9-17
N29307 9-17
N29309 9-17
N29312 9-13, 9-15
N29313 9-13, 9-15
N29315 9-15
N29317 9-13, 9-15
N29318 9-13, 9-15
N29319 9-3, 9-5, 9-7, 9-9, 9-11, 9-13, 9-15
N29320 9-3, 9-5, 9-7, 9-9, 9-11, 9-17, 9-18
N29321 9-18
N29322 9-18
N29323 9-18
N29324 9-18
N29325 9-18
N29328 9-18
N29329 9-18
N29330 9-18
N29331 9-18
N29332 9-17
N29333 9-17
N29334 8-9
N29335 1-3, 1-5, 1-7, 1-9
N29336 9-13
N29337 9-13, 9-15
N29338 9-13, 9-15
N29340 9-13, 9-15
N29341 9-13, 9-15
N29342 9-13, 9-15
N29343 9-13, 9-15
N29345 9-13, 9-15
N29349 9-3, 9-5
N29354 9-3, 9-5, 9-7, 9-9, 9-11
N29355 9-13, 9-15
N29356 9-9
N29357 9-3, 9-5, 9-7, 9-9, 9-11
N29358 9-3, 9-5, 9-7, 9-9, 9-11
N29359 9-3, 9-5, 9-7, 9-9, 9-11
N29360 9-3, 9-5
N29361 9-3, 9-5, 9-7, 9-9, 9-11
N29362 9-3, 9-5, 9-7, 9-9, 9-11
N29363 9-3, 9-5, 9-7, 9-9, 9-11
N29364 9-3, 9-5, 9-7, 9-9, 9-11
N29365 9-3, 9-5, 9-7, 9-9, 9-11, 9-18
N29366 9-5, 9-9, 9-11
N29367 9-13, 9-15
N29368 9-13, 9-15
N29369 9-13, 9-15
N29370 9-17
N29371 9-13, 9-15
N29372 5-9, 5-11, 5-13, 5-15, 5-17, 5-19, 5-21, 9-3, 9-5, 9-7, 9-9, 9-11
N29373 5-9, 7-3
N29375 9-13, 9-15
N29380 1-3, 1-5, 1-7, 1-9
N29382 2-5, 2-9, 2-20, 9-17
N29383 2-5, 2-9
N29384 8-4, 8-5, 8-8, 8-12, 9-17
N29385 8-4, 8-5, 8-8, 8-12, 9-17
N29393 9-9
N29395 6-8, 6-11, 6-13
N29397 9-13, 9-15
N29398 9-13, 9-15
N29399 9-13, 9-15
N29400 9-17
N29457 2-11
N29459 5-4
N29461 5-4
N29468 1-11, 1-17, 1-19
N29472 4-52
N29479 1-5, 1-7, 1-9
N29485 4-54
N29486 4-54
N29696 9-17
N29735 8-3, 8-7, 8-11
N29737 6-8
N29833 8-4, 8-8, 8-12
N29962 5-7, 5-9, 5-11, 5-13, 5-15, 5-17, 5-19, 5-21, 9-3, 9-5, 9-7, 9-9, 9-11
N29963 5-7, 5-9, 5-11, 5-13, 5-15, 5-17, 5-19, 5-21, 9-3, 9-5, 9-7, 9-9, 9-11
N29964 5-9, 5-11, 5-13, 5-15, 5-17, 5-19, 5-21, 9-3, 9-5, 9-7, 9-9, 9-11
N30068 4-14, 4-17, 4-20, 4-22, 4-26, 4-29, 4-32, 4-35, 4-38, 4-40, 4-44, 4-46, 4-52
N30575 8-4, 8-8, 8-12
N30594 2-5, 2-9, 2-20
N30659 8-4, 8-8, 8-12
N30660 8-4, 8-8, 8-12
N30661 8-4, 8-8, 8-12
N30662 8-4, 8-8, 8-12
N30663 8-4, 8-8, 8-12
N30746 11-3
N30948 2-15
N30949 2-15
N30950 2-15
N30951 2-15
N30952 2-15
N30953 2-15
N30957 2-15
N30958 2-15
N31012 4-51
N31014 4-51
N31016 4-51
N31019 6-3, 6-8, 6-15
N31020 6-3, 6-5, 6-8, 6-11, 6-13, 6-15
N31032 5-13, 5-15, 5-17, 5-19, 5-21, 9-7, 9-9, 9-11
N31033 5-13, 5-15, 5-17, 5-19, 5-21, 9-7, 9-9, 9-11
N31034 5-13, 5-15, 5-17, 5-19, 5-21, 9-7, 9-9, 9-11
N31040 2-20
N31049 8-3, 8-7, 8-9, 8-11
N31051 5-4
N31096 5-13, 5-15, 5-17, 5-19, 5-21, 9-7, 9-9, 9-11
N31160 4-51
N31161 4-51
N31162 4-51
N31163 4-51
N31165 4-51
N31171 4-51
N31172 4-51
N31173 4-51
N31174 4-51
N31177 4-51
N31178 4-51
N31179 4-51
N31180 4-51
N31187 4-3, 4-5, 4-7, 4-9, 4-13, 4-16, 4-19, 4-22, 4-25, 4-28, 4-31, 4-34, 4-37, 4-40, 4-42, 4-46, 4-51
N31188 4-3, 4-5, 4-7, 4-9, 4-13, 4-16, 4-19, 4-22, 4-25, 4-28, 4-31, 4-34, 4-37, 4-40, 4-42, 4-46, 4-51
N31189 4-3, 4-5, 4-7, 4-9, 4-11, 4-13, 4-16, 4-19, 4-22, 4-25, 4-28, 4-31, 4-34, 4-37, 4-40, 4-42, 4-46, 4-51
N31190 4-3, 4-5, 4-7, 4-9, 4-11, 4-13, 4-16, 4-19, 4-22, 4-25, 4-28, 4-31, 4-34, 4-37, 4-40, 4-42, 4-46, 4-51
N31209 2-19, 4-11
N31313 10-6
N31314 5-21, 9-11
N31342 9-7, 9-9
N31426 11-3
N31495 2-20
N31496 2-20
N31503 1-9
N31506 1-9
N31509 2-8
N31513 1-9
N31518 6-15
N31520 1-9
N31525 1-19, 1-25
N31527 1-19, 1-25
N31530 1-19, 1-25
N31531 1-25
N31532 1-19, 1-25
N31533 1-19, 1-25
N31535 1-17, 1-19, 1-23, 1-25
N31536 4-5, 4-16, 4-31, 4-34, 4-42, 4-46
N31537 4-5, 4-9, 4-16, 4-22, 4-25, 4-28, 4-31, 4-34
N31538 4-16, 4-31, 4-34, 4-42, 4-46
N31539 4-22, 4-25, 4-28
N31540 2-8
N31542 5-13, 5-15
N31545 6-15
N31546 6-15
N31548 1-9
N31549 1-9
N31550 8-3, 9-17
N31551 8-3, 9-17
N31603 5-11, 5-15, 5-17, 5-

19, 5-21, 9-3, 9-5, 9-7, 9-9, 9-11
N31604 9-3, 9-5, 9-7, 9-9
N31605 5-7, 5-11, 5-15, 5-17, 5-19, 5-21, 6-3, 6-5, 6-8, 6-11, 6-13, 6-15, 9-5, 9-9, 9-11
N31606 9-5, 9-9
N31609 1-9
N31623 1-9
N31624 5-4
N31625 9-3, 9-5, 9-7, 9-9
N31626 1-9
N31628 6-5, 6-15
N31682 2-8
N31695 1-19, 1-25
N31696 1-9
N31707 1-5, 1-7
N31708 1-5, 1-7
N31743 2-8, 9-15
N31760 6-15
N31763 6-9, 6-11, 6-13, 6-15
N31765 6-8, 6-11, 6-13
N31767 6-15
N31768 6-9
N31769 6-15
N31772 6-15
N31773 6-15
N31774 6-9, 6-11, 6-13, 6-15
N31775 6-9, 6-11, 6-13
N31776 2-8, 9-15
N31777 2-8
N31790 8-3, 8-7, 8-11
N31792 8-3, 8-7, 8-11
N32001 11-3
N32040 11-3
N32041 11-3
N32045 4-37, 4-40, 4-42, 4-46
N32048 4-40
N32049 4-37, 4-40
N32052 1-9
N32053 11-3
N32060 2-15
N32061 2-15
N32062 2-15, 2-17
N32065 2-15
N32068 2-15
N32069 5-21, 9-11, 10-10
N32101 2-15, 2-17, 2-18, 2-19
N32102 2-15, 2-17, 2-18, 2-19
N32104 2-15, 2-17
N32105 2-15, 2-17
N32106 2-15, 2-17
N32107 2-15, 2-17
N32110 2-15, 2-17
N32175 4-54
N32180 4-54
N32183 4-54
N32394 4-29, 4-35, 4-40, 4-46
N32396 4-31, 4-34, 4-42, 4-46
N32440 4-25, 4-28, 4-31, 4-34, 4-37, 4-40, 4-42, 4-46, 4-54
N32442 4-54
N32444 4-54
N32456 2-5, 2-9
N32457 2-5, 2-9, 2-17, 2-18, 2-19
N32458 2-20
N32459 2-20
N32460 2-20
N32464 9-17
N32465 9-17
N32466 2-5
N32467 2-5, 2-9
N32470 8-3, 8-7, 8-11
N32471 8-3, 8-7, 8-11
N32472 8-3, 8-7, 8-11, 9-17
N32473 8-3, 8-7, 8-11, 9-17
N32474 8-3, 8-7, 8-11, 9-17
N32475 8-3, 8-7, 8-11, 9-17
N32476 8-3, 8-7, 8-11, 9-17
N32477 8-3, 8-7, 8-11, 9-17
N32478 9-17
N32481 2-17, 2-18, 2-19
N32482 2-17, 2-18
N32483 2-17, 2-18, 2-19
N32491 8-3, 8-5, 8-7
N32492 8-3, 8-5, 8-7
N32494 8-3, 8-5, 8-7
N32499 4-37, 4-40, 4-44, 4-46
N32501 4-26, 4-29, 4-38, 4-40
N32512 5-9, 5-11
N32517 9-3, 9-5, 9-7, 9-9, 9-11, 9-13, 9-15
N32735 10-6
N32750 4-38, 4-40, 4-44, 4-46
N32769 1-3, 1-5, 1-7, 6-3, 6-5, 6-8, 6-11, 6-13, 6-15
N32770 1-3, 1-5, 1-7, 1-9
N32772 2-17
N32774 2-17
N32775 2-17
N32776 2-17
N32777 2-20
N32778 2-20
N32779 2-20
N32780 2-20
N32781 2-17
N32782 2-17
N32785 2-17
N32786 2-17
N32799 9-13, 9-15
N32967 4-49
N32968 4-49
N32974 4-54
N33159 4-25, 4-31, 4-37, 4-42
N33160 4-28, 4-34, 4-40, 4-46
N33198 5-13, 5-15
N33361 4-3, 4-13
N33362 4-13
N33553 6-3, 6-5, 6-11, 6-13, 6-15
N33748 1-21, 1-23, 1-25
N33749 1-21, 1-23, 1-25
N34000 6-5
N34005 6-5
N34008 4-11
N34010 4-11
N34011 4-11
N34012 4-11
N34015 4-11
N34020 6-5
N34021 4-11
N34023 4-11
N34024 4-11
N34025 4-11
N34026 5-19, 5-21, 9-11
N34033 4-11
N34041 6-11, 6-13
N34045 6-11, 6-13
N34047 5-19, 5-21, 9-11
N34048 5-19, 5-21, 9-11
N34049 6-5
N34051 5-19, 5-21, 9-11
N34052 5-19, 5-21, 9-11
N34056 4-11
N34067 6-11
N34069 6-11
N34072 6-11
N34087 5-19, 5-21, 9-11
N34177 8-3, 8-5, 8-7
N34251 6-8
N34263 8-3, 8-7, 8-11
N34281 1-3, 1-5, 1-7, 1-9
N34288 5-19, 5-21, 9-11
N34290 4-11
N34291 4-11
N34298 10-2
N34299 10-2
N34354 10-2
N34355 4-11
N34356 4-11
N34359 2-19
N34361 10-6
N34362 5-19, 10-10
N34363 5-19, 10-10
N34364 5-19, 5-21, 9-11
N34366 5-19, 5-21, 9-11
N34396 10-2
N34398 10-2
N34399 10-2
N34456 10-2
N34476 1-3, 1-5, 1-7, 1-9, 11-3
N34477 6-3, 6-5, 6-9, 6-11, 6-13, 6-15, 11-3
N34478 1-3, 1-5, 1-7, 1-9, 11-3
N34550 10-6
N34554 10-6
N34715 8-9
N34731 2-17
N34742 1-11, 1-17, 1-19
N34779 6-13
N34788 6-13
N34791 8-9
N34792 8-9
N34793 8-9
N34794 8-9
N34795 8-9
N34841 8-9
N34842 8-9
N34855 1-13, 1-14
N34860 1-13, 1-14
N34865 1-13
N34870 1-13
N34875 1-13
N34880 1-14
N34885 1-13
N34890 1-13, 1-14
N34895 1-13, 1-14
N34905 1-13, 1-14
N34910 1-13
N34915 1-13
N34919 1-13
N34920 1-13
N34921 1-13
N34922 1-13
N34925 1-13
N34928 1-13, 1-14
N34929 1-13, 1-14
N34930 1-13, 1-14
N34933 1-13, 1-14
N35530 8-4, 8-8, 8-12
N35531 8-4, 8-8, 8-12
N35532 8-4, 8-8, 8-12
N35533 8-4, 8-8, 8-12
N35534 8-4, 8-8, 8-12
N35619 2-17

N35620 2-17
N36148 8-9
N36191 10-4
N36195 10-4
N37010 9-17
N37011 8-9
N37012 8-9
N37013 8-9
N37014 8-9
N37016 8-9
N37018 8-9
N37020 8-9
N37330 9-17
N37435 1-17, 1-19, 1-21, 1-23, 1-25
N37569 6-13
N37570 6-13
N37900 9-11
N38962 9-18
N38963 9-18
N40472 2-17
N40502 1-13
N40503 1-13, 1-14
N40509 5-21, 9-11
N40705 1-13
N41220 2-18
N41221 2-18
N42127 2-10, 2-11
N42128 2-10, 2-11
N42129 2-10, 2-11
N42130 2-10, 2-11
N42149 8-7, 8-11
N42166 2-4
N42220 1-3, 1-5, 1-7, 1-9
N42365 9-3, 9-5, 9-7, 9-9, 9-13
N42507 1-7
N42525 6-13
N42530 6-13
N44049 8-11
N44049R 8-11
N44050 1-7
N44060 1-7
N44070 1-7
N44080 6-8
N44090 1-7
N44100 1-7
N44140 4-13, 4-19
N44143 6-13
N44253 8-11
N44254 8-11
N44255 8-11
N44256 8-11
N44264 8-11
N44265 8-11

P

P106023 1-13, 1-14
P1318510 1-21, 1-23, 1-25, 2-5, 2-9, 9-13, 9-15, 10-4
P7C616 2-15, 2-17

R

R480031 5-4
R480034 1-11, 1-17, 1-19, 4-3, 4-5, 4-7, 4-9, 4-11, 4-13, 4-16, 4-19, 4-22, 4-25, 4-28, 4-31, 4-34, 4-37, 4-40, 4-42, 4-46
R480055 4-3, 4-5, 4-7, 4-9, 4-11, 4-13, 4-16, 4-19, 4-22, 4-25, 4-28, 4-31, 4-34, 4-37, 4-40, 4-42, 4-46
R480069 5-4
R480070 5-4

S

S-1115 1-11, 1-13, 1-14
S-1189 1-11, 1-17, 1-19, 5-9, 5-11, 5-13, 5-15, 5-17, 5-19, 5-21, 9-3, 9-5, 9-7, 9-9, 9-11
S-1191 10-2
S-1192 1-13
S-1198 2-4, 2-8, 4-35, 6-3, 6-5, 6-9, 6-11, 6-13, 6-15, 8-9, 9-13, 9-15
S-1201 4-54
S-1292 1-3, 1-5, 1-7, 1-9
S-1302 5-19, 5-21, 9-11
S-1303 5-11, 5-15, 5-17, 5-19, 5-21, 6-3, 6-5, 6-9, 6-11, 6-13, 6-15, 9-3, 9-5, 9-7, 9-9, 9-11
S-1925 1-13, 1-17, 1-19, 1-23, 1-25
S-3001 6-15
S-4747 7-3
S-4781 2-20
S-747 4-54
S-748 2-5, 2-9
S-751 4-11, 4-26, 4-29, 4-32, 4-35, 4-38, 4-40, 4-44, 4-46, 5-9, 5-11
S-752 2-5, 2-9, 3-4, 6-3, 6-5, 6-9, 6-11, 6-13, 6-15, 9-13, 9-15
S-776 4-26, 4-29, 4-32, 4-35, 4-38, 4-40, 4-44, 4-46, 5-5, 5-9, 5-11, 9-3, 9-5
S-951 1-11, 1-17, 1-19, 1-21, 1-23, 1-25
S10730 1-13, 2-5, 2-9, 2-12, 2-13, 9-13, 9-15
S10954 2-4, 2-8
S10955 2-4, 2-8
S13336 2-15, 2-17, 2-18, 8-9
S13337 5-9, 5-11, 9-3, 9-5
S25999 5-21, 9-11, 10-10, 10-14
S27987 9-13, 9-15
S29378 1-11, 1-13, 1-14, 1-17, 1-19
S29958 5-17, 5-19, 5-21, 5-22, 9-11
S29959 5-17, 5-19, 5-21, 5-22, 9-11
S29960 5-17, 5-19, 5-21, 5-22, 9-11
S29961 5-17, 5-19, 5-21, 5-22, 9-11
S39549 2-18
S39948 2-18
S39949 2-18

T

T-5276 10-6

W

W-131 1-21, 1-23, 1-25, 6-3, 6-5, 6-9, 6-11, 6-13, 6-15
W-1540 2-4, 2-8
W-1552 4-29, 4-35, 4-40, 4-44, 4-46, 7-3
W-1553 10-2
W-1558 1-3, 1-5, 1-9
W-1575 6-9, 6-11, 6-13
W-1628 1-11, 1-17, 1-19
W-1663 2-4, 2-8, 2-13
W-1847 9-3, 9-5, 9-7, 9-9, 9-11, 9-17
W-1854 2-4, 2-8, 11-3
W-187 1-3, 1-5, 1-7, 1-9, 2-4, 2-8, 4-53, 4-54, 5-5, 5-13, 5-15, 6-3, 6-5, 6-9, 6-11, 6-13, 6-15
W-3022 5-7
W-3328 3-2, 3-3
W-4181 1-13
W-469 2-4, 2-8, 2-20, 4-3, 4-5, 4-7, 4-9, 4-11, 4-13, 4-16, 4-19, 4-22, 4-25, 4-28, 4-31, 4-34, 4-37, 4-40, 4-42, 4-46, 4-51, 5-7, 5-9, 5-11, 5-17, 5-19, 5-21, 5-22, 6-3, 6-5, 6-8, 6-11, 6-13, 6-15, 7-3, 8-3, 8-7, 8-9, 8-11, 9-3, 9-5, 9-11, 9-17
W-470 4-14, 4-17, 4-20, 4-22, 4-26, 4-29, 4-32, 4-35, 4-52, 6-3, 6-5, 6-8, 6-11, 6-13, 6-15
W-471 4-26, 4-29, 4-32, 4-35, 4-38, 4-40, 4-44, 4-46
W-472 1-3, 1-5, 1-7, 1-9
W-473 1-3, 1-5, 1-7, 1-9
W-475 1-3, 1-5, 1-7, 1-9, 4-3, 4-5, 4-13, 4-16, 4-31, 4-35, 4-44, 4-46, 5-5, 6-3, 6-5, 6-9, 6-11, 6-13, 6-15, 11-3
W-476 7-3
W-477 2-10, 2-11, 5-5
W-478 6-3, 6-5, 6-9, 6-11, 6-13, 6-15
W-479 1-3, 1-5, 1-7, 1-9, 5-7, 5-11, 5-15, 5-17, 5-19, 5-21, 8-3, 8-7, 8-11, 9-5, 9-9, 9-11, 10-6
W-480 1-11, 1-17, 1-19, 2-9, 4-11
W-481 2-9
W-485 11-3
W-486 7-3
W-488 1-21, 1-23, 1-25, 5-5, 9-13, 9-15
W-489 10-6
W-490 1-3, 1-5, 1-7, 1-9
W-492 6-3, 6-5, 6-9, 6-11, 6-13, 6-15
W-493 1-13, 6-3, 6-9, 6-11, 6-13, 6-15
W-494 1-11, 1-13, 1-14, 1-17, 1-19
W-495 6-5
W-496 1-17, 1-19, 1-23, 1-25, 4-3, 4-5, 4-7, 4-9, 4-13, 4-16, 4-19, 4-22, 4-25, 4-28, 4-32, 4-37, 4-40, 4-44, 4-46
W-497 1-11, 1-13, 1-14, 2-15, 2-17, 5-13, 5-15
W-498 2-5, 2-9
W-500 1-11, 1-13, 1-14
W-501 2-4, 2-8, 2-13
W-503 2-4, 2-8
W-509 1-13, 1-14
W-512 4-3, 4-5, 4-7, 4-9, 4-11, 4-13, 4-17, 4-20, 4-22, 4-26, 4-29, 4-32, 4-35, 4-38, 4-40, 4-44, 4-46, 4-49, 4-51, 5-7, 5-9, 5-11, 5-17, 5-19, 5-21, 5-22, 9-3, 9-5, 9-7, 9-9, 9-11, 9-17
W-513 1-3, 1-5, 1-7, 1-9, 1-11, 1-13, 1-14, 5-7, 5-9, 5-

11, 5-15, 5-17, 5-19, 5-21, 5-22, 9-3, 9-5, 9-7, 9-9, 9-11
W-514 1-3, 1-5, 1-7, 1-9, 1-11, 1-17, 1-19, 2-5, 2-9, 2-12, 2-13, 2-15, 2-17, 2-18, 2-19, 2-20, 4-3, 4-5, 4-7, 4-9, 4-11, 4-14, 4-17, 4-20, 4-22, 4-26, 4-29, 4-32, 4-35, 4-38, 4-40, 4-44, 4-46, 4-49, 5-5, 5-7, 5-9, 5-11, 5-13, 5-15, 5-19, 5-21, 6-3, 6-5, 6-9, 6-11, 6-13, 6-15, 8-9, 9-3, 9-5, 9-11, 9-13, 9-15, 11-3
W-515 5-5
W-516 1-3, 1-5, 1-7, 1-9, 1-11, 1-13, 1-17, 1-19, 1-21, 1-23, 1-25, 2-5, 2-9, 4-3, 4-5, 4-7, 4-9, 4-11, 4-14, 4-17, 4-20, 4-22, 4-26, 4-29, 4-32, 4-35, 4-38, 4-40, 4-44, 4-46, 5-5, 5-9, 5-11, 5-13, 5-15, 5-17, 5-19, 5-21, 6-3, 6-5, 6-9, 6-11, 6-13, 6-15, 7-3, 9-3, 9-5, 9-7, 9-9, 9-11, 9-13, 9-15, 11-3
W-517 1-11, 1-13, 1-14, 1-17, 1-19, 1-21, 1-23, 1-25, 2-5, 2-9, 2-13, 2-15, 2-17, 5-13, 5-15, 6-9, 6-11, 6-13, 6-15, 10-2, 10-4
W-518 1-11, 1-13, 1-14, 1-17, 1-19, 1-21, 1-23, 1-25, 10-2, 10-6
W-520 1-21, 1-23, 1-25
W-521 4-3, 4-5, 4-7, 4-9, 4-11, 4-13, 4-16, 4-19, 4-22, 4-25, 4-28, 4-32, 4-35, 4-37, 4-40, 4-44, 4-46, 4-49, 4-51, 5-7, 5-9, 5-11, 5-17, 5-19, 5-21, 5-22, 9-3, 9-5, 9-7, 9-9, 9-11, 9-17
W-522 1-3, 1-5, 1-7, 1-9, 1-11, 1-13, 1-14, 2-10, 2-11, 5-7, 5-9, 5-11, 5-15, 5-17, 5-19, 5-21, 5-22, 9-3, 9-5, 9-7, 9-9, 9-11
W-523 1-3, 1-5, 1-7, 1-9, 1-11, 1-17, 1-19, 2-4, 2-8, 2-10, 2-11, 2-12, 2-13, 2-15, 2-17, 2-18, 2-19, 4-3, 4-5, 4-7, 4-9, 4-11, 4-13, 4-16, 4-19, 4-22, 4-25, 4-29, 4-32, 4-35, 4-38, 4-40, 4-44, 4-46, 4-

CORPORATE OFFICE AND TRAINING CENTRE
2131 Airport Drive
Saskatoon, SK. Canada S7L 7E1
Tel: (306) 933-8585 Fax: (306) 933-8626

MANUFACTURING AND RESEARCH & DEVELOPMENT
85 York Road Yorkton, SK. Canada S3N 3P2
Tel: (306) 783-8585 Fax: (306) 782-5250

MANUFACTURING
284 - 6th Ave. N.W.
Minnedosa, MB. Canada R0J 1E0
Tel: (204) 867-2713 Fax: (204) 867-2678

UNITED STATES OFFICE
4400 Burdick Expressway E.
Minot, ND. USA 58701
Tel: (701) 852-4171 Fax: (701) 838-9444

The policy of Morris Industries Ltd. is one of continuing improvement, therefore, the company reserves the right to change any specification without notice.

October 2007 Printed in Canada